ORIGINAL INSTRUCTIONS

Cordless High Pressure Cleaner

RPW36X120HI5
RPW36120HI



Important!

It is essential that you read the instructions in this manual before assembling, operating, and maintaining the product.

Subject to technical modification.

Safety, performance, and dependability have been given top priority in the design of your cordless high pressure cleaner.

INTENDED USE

The cordless high pressure cleaner is only intended for use outdoors. For safety reasons the product must be adequately controlled by using two-handed operation.

The product is designed for home or domestic use. It is intended to clean machines, vehicles, buildings, floors, tools, facades, terraces, floors, and concrete walkways by removal of stubborn dirt using clean water with or without cleaning detergent.

It should be used in dry and well-illuminated conditions.

Do not use the product for any other purpose.

⚠ WARNING

The product is designed for use with a neutral cleaning agent supplied or recommended by the manufacturer. The use of other cleaning agents or chemicals may adversely affect the safety of the product.

GENERAL SAFETY WARNINGS

⚠ WARNING

Read all safety warnings and all instructions. Failure to follow the warnings and instructions may result in electric shock, fire, and/or serious injury.

⚠ CAUTION

The product must not be used on the drinking water supply without a backflow preventer being installed that corresponds to EN 12729 Type BA. Water flowing through a backflow preventer is considered non-drinkable. Always observe the regulations of your local water utility company when connecting the product to a water supply line.

- The product is not intended for use by children or persons with reduced physical, sensory, or mental capabilities, or lack of experience and knowledge. Children should be adequately supervised to ensure they do not play with the product.
- Wear a complete personal protective equipment when operating the product, such as boots, safety gloves, safety helmets with visor, and hearing protection. Use high-impact visors only with liquid splash protection.

⚠ WARNING

Do not use the product when people are within range, unless they wear protective clothing.

- To reduce the risk of injury, keep children and visitors away. All visitors should wear safety glasses and be kept at a safe distance from the work area.
- Inspect the safety devices, such as safety valves, flow switches, and pressure switches to check if they are in good working condition. Make sure all safety devices are operating properly before each use, such as:
  - Power switch
    - The power switch prevents unintentional operation of the product.
  - Trigger handle lock
    - The trigger handle lock locks the trigger and prevents unintentional opening of the high-pressure jet.
  - Overflow valve with pressure switch
    - The overflow valve prevents the permissible working pressure from being exceeded. If the lever on the trigger gun is released, the pressure switch turns off the pump and the high-pressure jet stops. If the lever is pulled, the pump turns on again.
  - Motor protection switch
    - The motor protection switch switches off the device if the power consumption is high.
- Do not use the product if the important parts are damaged, such as safety devices, high-pressure hoses, or trigger gun.
- Exercise caution when opening the trigger. Hold the handle firmly with two hands to avoid injury when the handle kicks back.

⚠ WARNING

During use of high pressure cleaners, aerosols may be formed. Inhalation of aerosols can be hazardous to health.

⚠ WARNING

Depending on the application, shielded nozzles can be used for high-pressure cleaning, which will reduce the emission of hydrous aerosols. However, not all applications allow the use of such a device. If shielded nozzles are not applicable for the protection against aerosols, a respiratory mask of class FFP 2 or equivalent may be needed, depending on the cleaning environment.

- Always stop the product when you leave it unattended.
- High-pressure jet is dangerous if misused. Do not direct the jet to people, live electrical equipment, or the product itself.
- To avoid a risk of explosion, do not spray flammable liquids.
- Do not direct the jet against yourself or others in order to clean clothes or footwear.
- Do not use the product to clean electronic devices, clothes, or footwear.
- High-pressure hoses, fittings, and couplings are important for the safety of the product. Use only hoses, fittings, and couplings recommended by the manufacturer.

BATTERY PACK SAFETY WARNINGS

- Recharge the battery pack only with the charger specified by the manufacturer. A charger that is suitable for one type of battery pack may create a risk of fire when used with another battery pack.
- When battery pack is not in use, keep it away from other metal objects, such as paper clips, coins, keys, nails, screws, or other small metal objects that can make a connection from one terminal to another. Shorting the battery pack terminals together may cause burns or a fire.
- Keep the battery pack and the charger away from wet and damp conditions.
- Use the product only with battery packs specified in this manual. Use of any other battery packs may create a risk of injury and fire.
- Under abusive conditions, liquid may be ejected from the battery pack; avoid contact. If contact accidentally occurs, flush with water. If liquid contacts eyes, seek medical help. Liquid ejected from the battery pack may cause irritation or burns.

ADDITIONAL SAFETY WARNINGS

- Some regions have regulations that restrict the use of the product in some operations. Check with your local authority for advice.
- Before each use, check for damage. A damaged high-pressure hose must be replaced immediately. Ensure all connections, such as high-pressure hose and nozzle, are secure. Unwind the hose properly so they may not get twisted or kinked.
- Do not allow children or untrained individuals to use the product.
- Before starting any cleaning operation, close doors and windows. Clear the area to be cleaned of debris, toys, outdoor furniture, or other objects that could create a hazard.
- Never pick up or carry the product while the motor is running.
- Do not use the product in temperatures below 0°C.
- Do not use acids, alkalines, solvents, flammable material, bleaches, or industrial grade solutions in the product. These products can cause physical injuries to the operator and irreversible damage to the product.
- Always operate the product on a level surface.

⚠ WARNING

High-pressure jet can be dangerous if subject to misuse. The jet must not be directed to people, animals, electrical devices, or the product itself.

- Hold the handle securely with both hands. Expect the handle to move when the trigger is pulled due to reaction forces. Failure to do so could cause loss of control and injury to yourself and others.

- Make sure the air in the hose and pump is released before you turn on the product. To remove the air in the hose and pump, connect the water supply to the pump using a garden hose, connect the trigger handle to pump using the high-pressure hose, disengage the trigger handle lock, and press the trigger until there is a steady flow.
- Exercise caution to avoid slipping or falling.
- Keep firm footing and balance. Do not overreach. Overreaching can result in loss of balance.
- Only use accessories that are recommended by the manufacturer. The use of improper accessories may cause injury.
- Never leave the product running unattended. Turn the product off. Do not leave the product until it comes to a complete stop.
- Be familiar with the controls. Know how to stop the product and bleed the pressure quickly.
- Stay alert and exercise control. Watch what you are doing and use common sense.
- Do not use the product when you are tired, ill, or under the influence of drugs, alcohol, or medication. A moment of inattention while operating the product may result in serious personal injury.
- Do not use the product if the switch does not turn it on and off. Any product that cannot be controlled with a switch is dangerous and must be repaired.
- Keep a minimum distance of 30 cm when cleaning vehicles. The high-pressure jet may damage or burst vehicle tires and/or tire valves.

RESIDUAL RISKS

Even when the product is used as prescribed, it is still impossible to completely eliminate certain residual risk factors. The following hazards may arise in use and the operator should pay special attention to avoid the following:

- Injury caused by the high-pressure jet
  - Avoid pointing the high-pressure jet to people, animals, and to yourself.
- Injury caused by kickback
  - Always hold the handle or the trigger wand firmly with your two hands.
- Injury caused by inhalation of aerosols
  - Wear appropriate respiratory mask.
- Injury caused by exposure to noise
  - Wear ear protection.

RISK REDUCTION

It has been reported that vibrations from handheld tools may contribute to a condition called Raynaud's Syndrome. Symptoms may include tingling, numbness, and blanching of the fingers, usually apparent upon exposure to cold. Hereditary factors, exposure to cold and dampness, diet, smoking, and work practices are all thought to contribute to the development of these symptoms. There are measures that can be taken by the operator to possibly reduce the effects of vibration:

- Keep your body warm in cold weather. When operating the product, wear gloves to keep the hands and wrists warm.
- After each period of operation, exercise to increase blood circulation.
- Take frequent work breaks. Limit the amount of exposure per day.

If you experience any of the symptoms of this condition, immediately discontinue use and see your physician.

⚠ WARNING

Injuries may be caused, or aggravated, by prolonged use of a tool. When using any tool for prolonged periods, ensure you take regular breaks.

OPERATION

STARTING AND STOPPING THE PRODUCT

To start the product:

1. Connect the nozzle to spray wand and connect the spray wand to trigger handle.
2. Connect trigger handle to the water outlet of high pressure cleaner using the high-pressure hose.
3. Connect the water inlet of the high pressure cleaner to the water supply using a garden hose.
4. Open the trigger to release the air in the hoses and high pressure cleaner.

5. Install the battery to high pressure cleaner.
6. Press the power switch to turn on the product.

To stop the product:

- Switch off the power switch.
  NOTE: The fan will keep running to cool down the product 1 minute after the unit has been shut off.

USE OF POTABLE WATER SUPPLY

- The product can use potable water. Use Ryobi suction hose kit and water bags for the connection.
- When connecting the product to the water supply, follow the regulations from the local water supplier.

⚠ CAUTION

If you connect the product to a potable water supply, you must install a backflow prevention device to the water supply system. The installation should be installed by professional service personnel and should be accepted by the local water supplier.

- Make sure there is water in the hose and pump before turning on the product.

⚠ WARNING

If there is no water coming out from the nozzle, stop the product immediately using the power switch. Working without water may cause serious damage to the pump.

USE OF WATER BAG

The product can use a water bag as water supply source.

To use a water bag:

1. Close the outlet valve of the water bag.
2. Remove the inlet cap and fill the water bag. Replace the inlet cap.
3. Place the water bag at least 0.5 m above the high pressure cleaner.
4. Connect the water bag outlet to the water inlet of high pressure cleaner using a garden hose.
5. Open the outlet valve of the water bag.
6. Start the product according the steps on “To start the product” section.

⚠ WARNING

The product must be primed before turning it on. There should be water at the pump and high-pressure hose before turning on the product.

It usually takes time to release the air in hose and pump. Do not run the product until there is a steady flow coming out from nozzle.

⚠ WARNING

Keep the inlet valve open when the product is running, otherwise the water coming out will be much slower. Running the product with insufficient water supply may damage it.

⚠ WARNING

Do not splash water to high pressure cleaner. It may damage the electric parts and the battery pack.

USE OF 5-IN-1 NOZZLE

There are five spray pattern settings located on the 5-in-1 nozzle. To select a spray pattern, rotate the spray selector to the desired setting.

Nozzle	Application
0°	Spot cleaning of high, hard-to-reach areas ■ Removing caked-on mud from heavy construction, farm, or lawn equipment ■ Cleaning tar, glue, or stubborn stains from concrete ■ Cleaning overhead areas ■ Removing rust from steel and oxidation from aluminum

25°	For general purpose or large surfaces ■ General cleaning of dirt, mud, and grime ■ Cleaning roofs, gutters, and downspouts ■ Removing light mildew stains ■ Removing algae and bacteria build-up from pools ■ Rinsing surfaces in preparation for painting
40°	For wide-angle rinsing ■ Light cleaning and washing ■ Washing and rinsing of painted surfaces and boats ■ Cleaning roofs, windows, patios, and driveways
Soap short range	For short range detergent applications ■ Driveways, walkways, decks and patios, vehicles, fences, paint prep, patio furniture, and lawn equipment
Soap long range	For long range detergent applications ■ Second story washing

BOOST MODE

- The boost mode functionality is only available when the high pressure cleaner is used with Ryobi 36V Lithium+ Hi-Tech battery packs, such as model BPL3626D, BPL3640D, or BPL3650D.
- Boost mode provides extra power. This function is limited to 8 min of continuous operation. Press the boost button to switch from normal operation mode to boost mode.
- Do not use the boost mode for more than 8 min. The boost mode automatically returns to normal mode after 8 min.
- After 8 min of boost mode usage, the high pressure cleaner will not return to boost mode until 8 min of normal mode use or rest. The LED in the boost button flashes when the boost mode is not available for activation.

TOTAL STOP SYSTEM

- The high pressure cleaner is equipped with a total stop switch. When you release the trigger, the motor stops to save power.
- The LED in the power switch flashes when the total stop system is active.
- The fan runs continuously to cool down the product when the total stop system is active.

⚠ CAUTION

Bring the product to an authorized service centre when the motor does not stop after you release the trigger.

TRANSPORTATION AND STORAGE

⚠ CAUTION

Mind the weight of the product when selecting the storage location and during transportation to prevent accidents or injuries.

- Stop the product, remove the battery pack, and allow the product to cool down. Disconnect the product from the water supply before storing or transporting. Never place the product in any position other than upright.
- Remove water from all hoses and the pump, and empty the detergent tank before storing the product.
- Clean all foreign materials from the product. Store it in a cool, frost-free, dry, and well-ventilated place that is inaccessible to children. Keep away from corrosive agents such as garden chemicals and de-icing salts. Do not store outdoors.
- For transportation in a vehicle, secure the product against movement or falling to prevent injury to persons or damage to the product.

⚠ WARNING

Only store the product indoor. Storing in an area with temperature below 0° will damage the product.

TRANSPORTING LITHIUM BATTERIES

Transport the battery pack in accordance with local and national provisions and regulations.

Follow all special requirements on packaging and labelling when transporting batteries by a third party. Ensure that no batteries can come in contact with other batteries or conductive materials while in transport by protecting exposed connectors with insulating, non-conductive caps or tape. Do not transport batteries that are cracked or leaking. Check with the forwarding company for further advice.

MAINTENANCE

⚠ WARNING

Use only original manufacturer's replacement parts, accessories, and attachments. Failure to do so can cause possible injury and poor performance, and may void your warranty.

⚠ WARNING

Servicing requires extreme care and knowledge and should be performed only by a qualified service technician. For service, bring the product to an authorised service centre. When servicing, use only original replacement parts.

- Stop the product, remove the battery pack, and allow the product to cool down. Disconnect the product from the water supply before:
  - cleaning the product
  - maintaining the product
  - replacing spare parts
- You may make adjustments or repairs described in this manual. For other repairs, contact an authorised service centre.
- Regularly inspect and maintain the high pressure cleaner for safe operation. Ryobi recommends inspecting the product every 6 months.
- Check all nuts, bolts, and screws at frequent intervals for proper tightness to ensure the product is in safe working condition. Any part that is damaged should be properly repaired or replaced by an authorised service centre.

KNOW YOUR PRODUCT

See page 11.

1. Handle
2. Trigger handle
3. Trigger handle lock
4. Trigger
5. Hose strap
6. Water inlet
7. Wheel
8. Bladder
9. Siphon hose
10. Water inlet adapter
11. High-pressure hose
12. Charger
13. Battery
14. 5-in-1 nozzle
15. Turbo nozzle
16. Soap tank
17. Water outlet
18. Soap tank cap
19. Battery cover
20. Boost button
21. Power switch
22. Spray wand

SYMBOLS ON THE PRODUCT



Warning



To reduce the risk of injury from kickback, hold the spray wand securely with both hands when the product is on.



To reduce the risk of injury, read and understand the operator's manual before using the product.



Wear eye and hearing protection.



To reduce the risk of injury from high-pressure injection, do not direct spray at persons or animals.



Remove the battery before starting any maintenance work on the product.



Wear non-slip, heavy-duty protective gloves.



The product is not suitable for connection to the drinking water mains without backflow preventer.



Never point the spray wand to human, animals, the body of the product, power supply, or any electrical appliances.



Burst hazard



Never use bleach or solvent-based detergent.



Detergent dilution ratio



Conforms to all regulatory standards in the country in the EU where the product is purchased.



EurAsian Conformity Mark



Ukrainian mark of conformity



The guaranteed sound power level is 79 dB.



Waste electrical products should not be disposed of with household waste. Please recycle where facilities exist. Check with your local authority or retailer for recycling advice.

SYMBOLS IN THIS MANUAL



Parts or accessories sold separately



Note



Warning

The following signal words and meanings are intended to explain the levels of risk associated with this product.

⚠ DANGER

Indicates an imminently hazardous situation, which, if not avoided, will result in death or serious injury.

⚠ WARNING

Indicates a potentially hazardous situation, which, if not avoided, could result in death or serious injury.

⚠ CAUTION

Indicates a potentially hazardous situation, which, if not avoided, may result in minor or moderate injury.

CAUTION

Without safety alert symbol

Indicates a situation that may result in property damage

TROUBLESHOOTING

Problem	Possible causes	Solution
Machine does not start	Drained battery	Charge the battery.
	Deffective battery	Replace with compatible battery pack.
	Fuse has blown	Bring the product to an authorized service centre for service or repair.
Fluctuating pressure	Pump is sucking air	Check that hoses and connections are air tight.
	Valves are dirty, worn out, or stuck	Clean and replace the part or refer to a local distributor.
	Pump seals worn out	Clean and replace the part or refer to a local distributor.
Motor buzzes	Low voltage or low temperature	Activate the trigger of the spay handle.
Machine stops	Fuse has blown	Bring the product to an authorized service centre for service or repair.
	Drained battery	Charge the battery.
	Thermal sensor activated	Leave the high pressure cleaner for 15 minutes to cool down.
	Nozzle partially blocked	Clean the nozzle.
Fuse blows	Fuse too small	Bring the product to an authorized service centre for replacement.
Machine pulsating	Air in inlet hose/pump	Allow the product to run with open trigger until regular working pressure resumes.
	Inadequate supply of mains water	Check that the water supply corresponds to the specifications required (see model tag). Avoid using long, thin hoses.
	Nozzle partially blocked	Clean the nozzle.
	Water filter blocked	Clean the filter.
	Hose kinked	Straighten out hose.
Machine often starts and stops by itself	Pump/spray handle is leaking	Contact your nearest authorized service centre.
Machine starts, but no water comes out	Pump, hoses, or other accessory is frozen	Wait for the pump, hoses, or other accessory to thaw.
	No water supply	Connect the water inlet port to a water supply.
	Water filter blocked	Clean the filter.
	Nozzle blocked	Clean the nozzle.

RPW36X120HI5

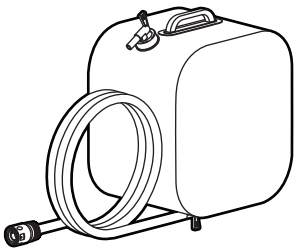

x 1

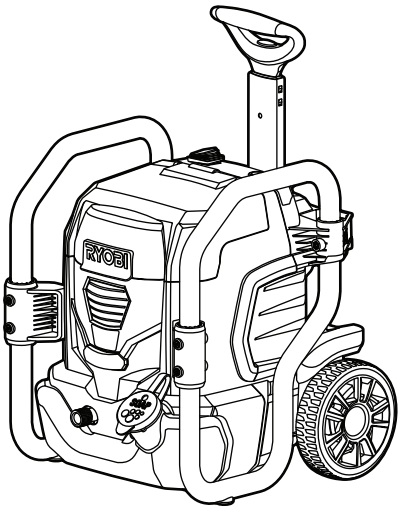

x 1

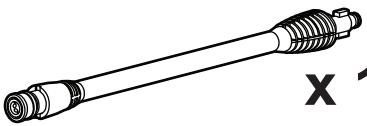

x 1

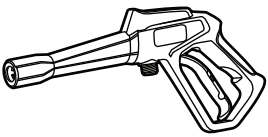

x 1

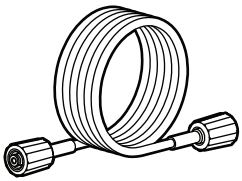

x 1



x 1



x 1



x 1



x 1



x 1

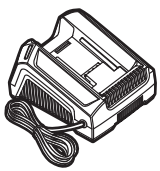

x 1

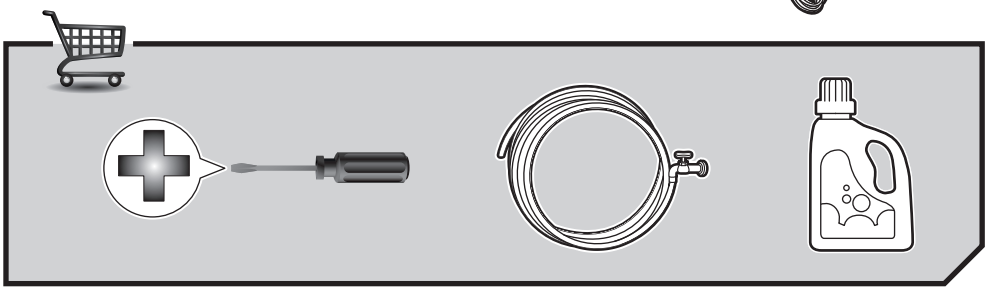

RPW36120HI

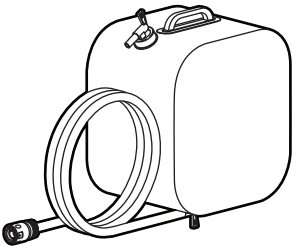

x 1

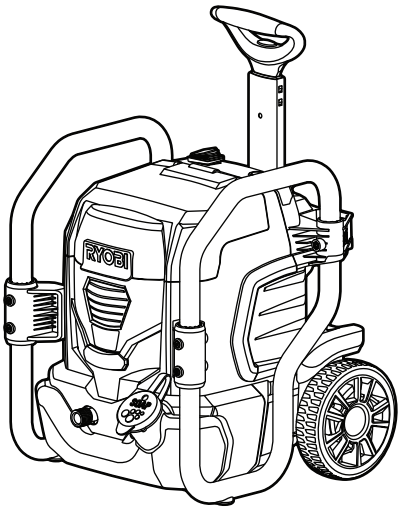

x 1

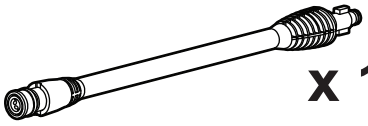

x 1

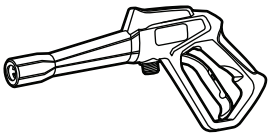

x 1

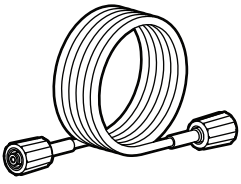

x 1



x 1



x 1



x 1

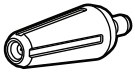

x 1

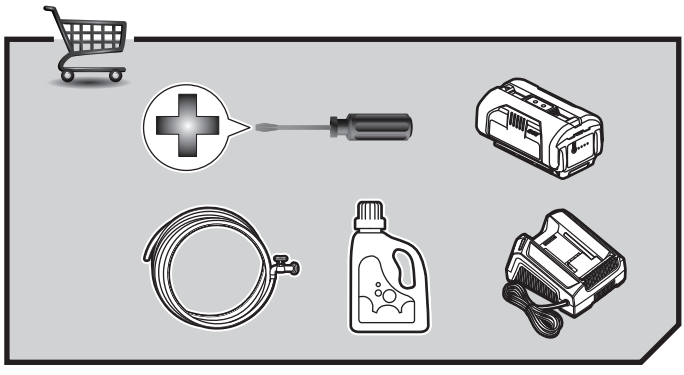

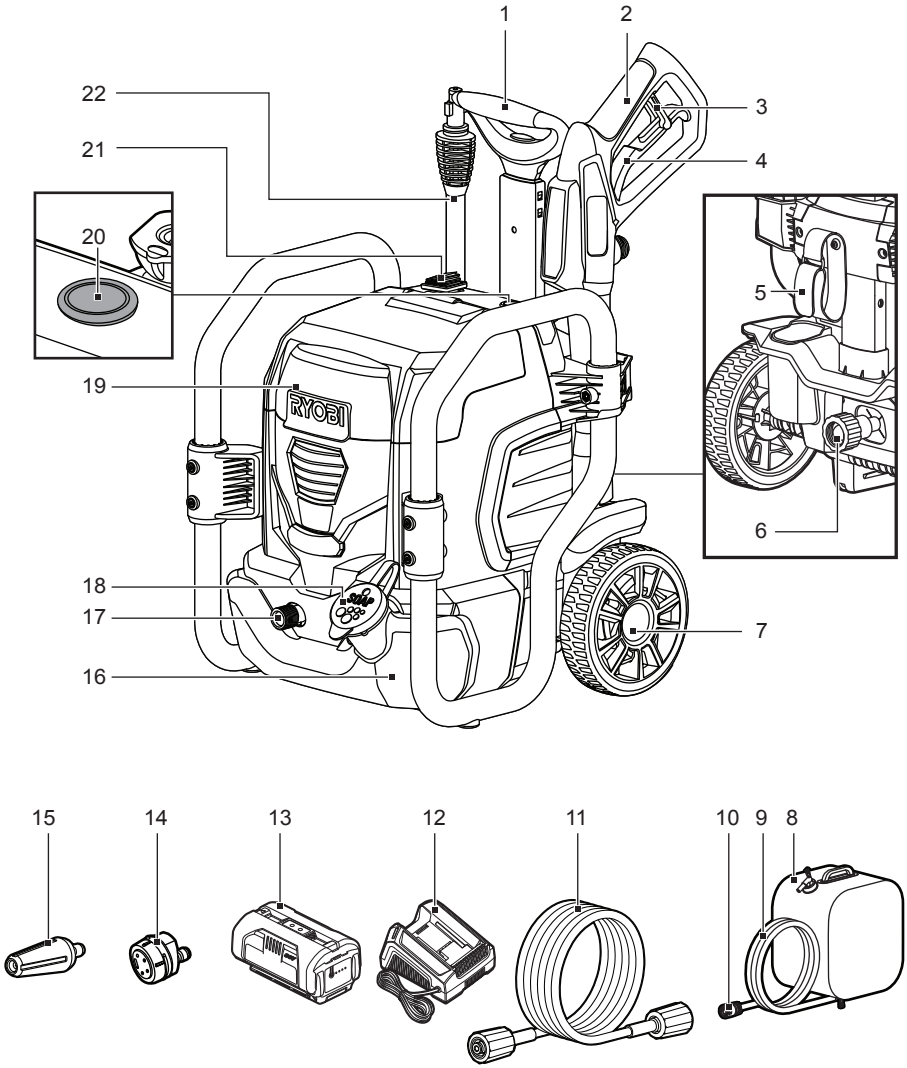
1
2
3
4
5
6
7
8
9
10
11
12
13
14
15
16
17
18
19
20
21
22
RYOBI

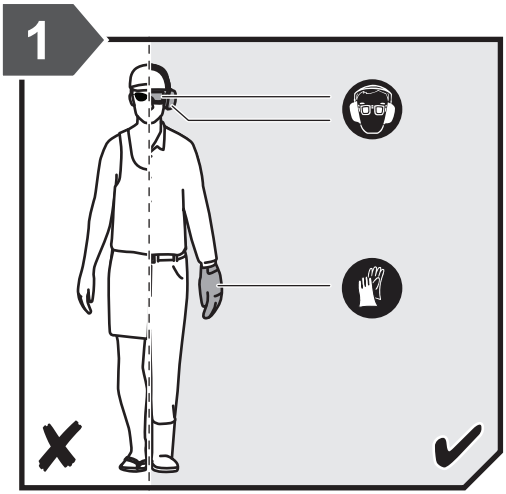
1

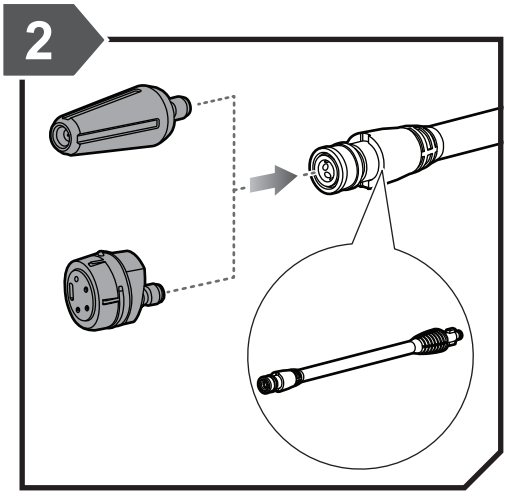
2

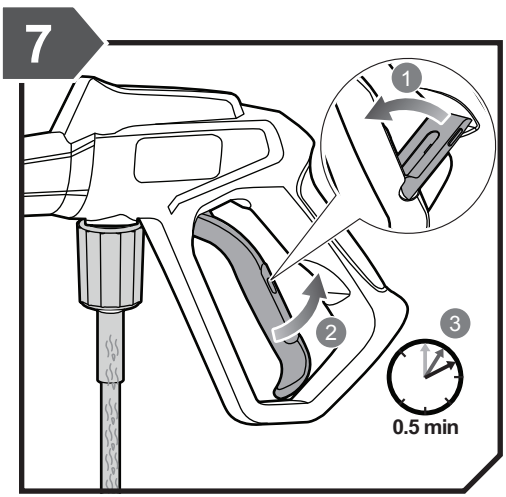
7
1
2
3
0.5 min

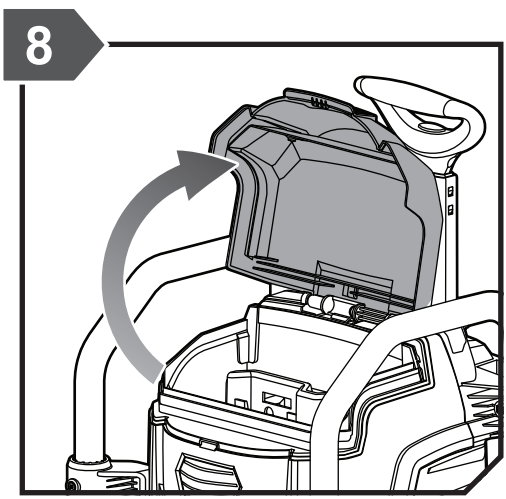
8

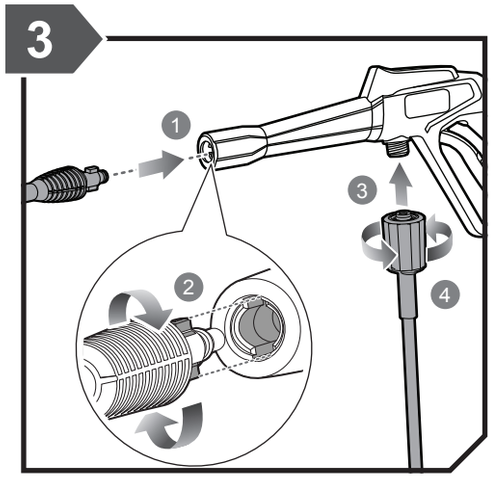
3
1
2
3
4

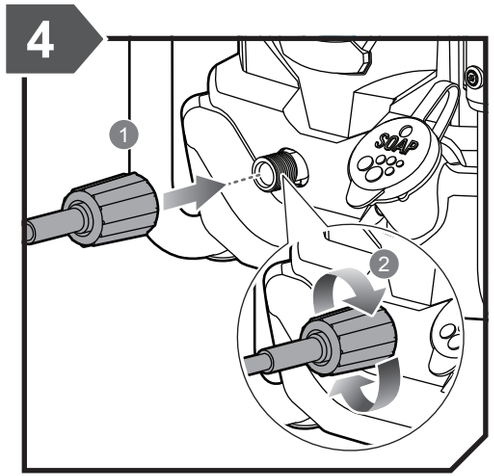
4
1
2

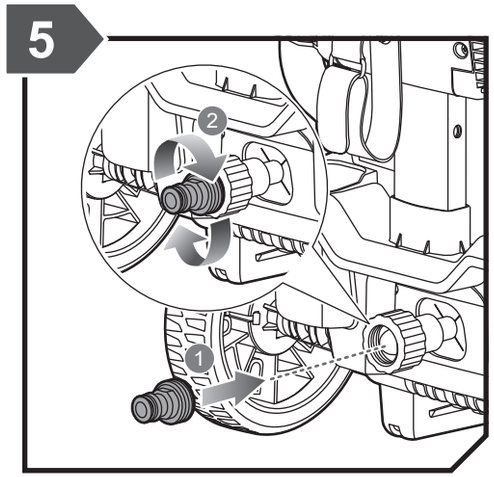
5
2
1

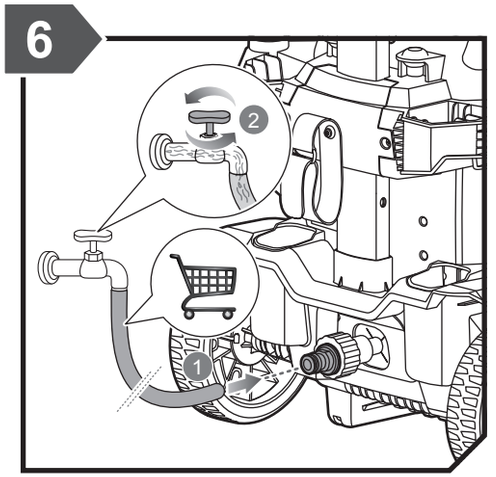
6
2
1

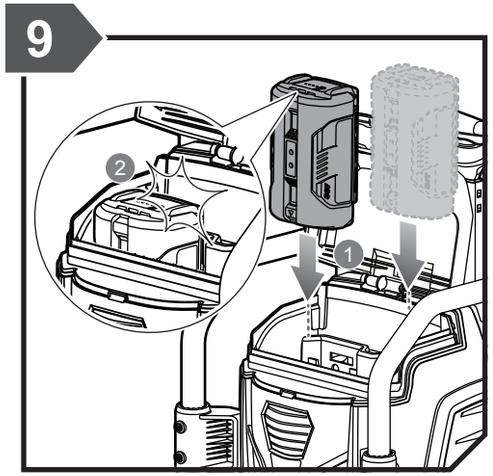
9
2
1

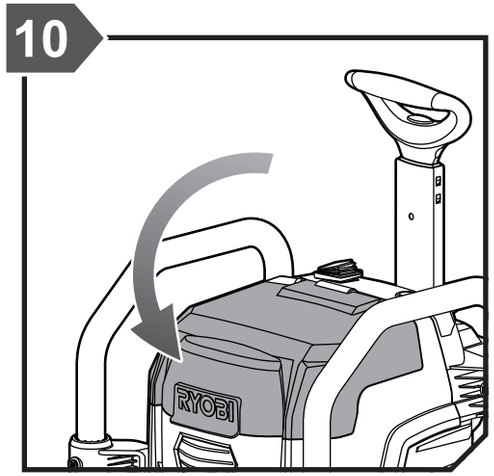
10
RYOBI

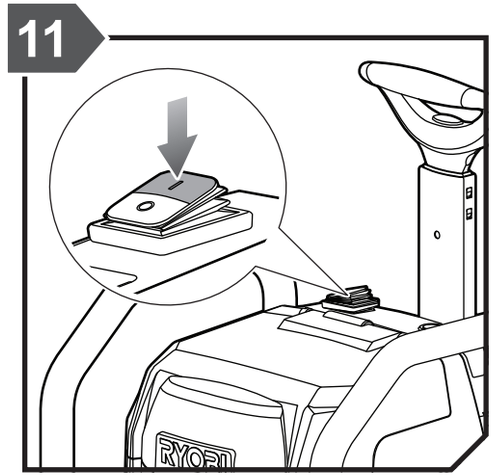
11
RYOBI

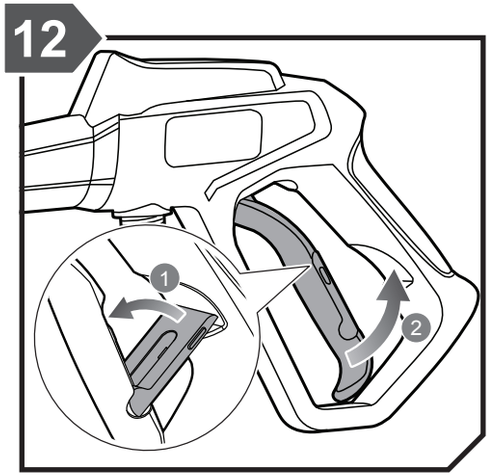
12
1
2

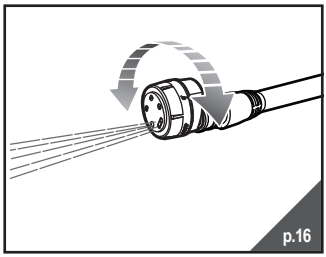
p.16

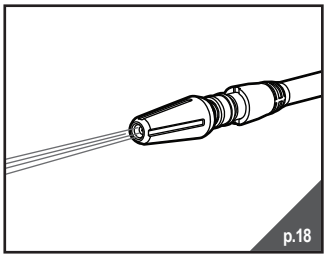
p.18

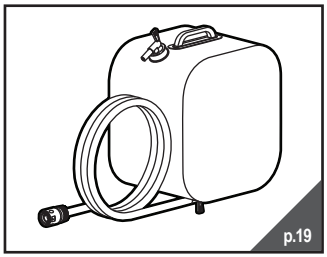
p.19

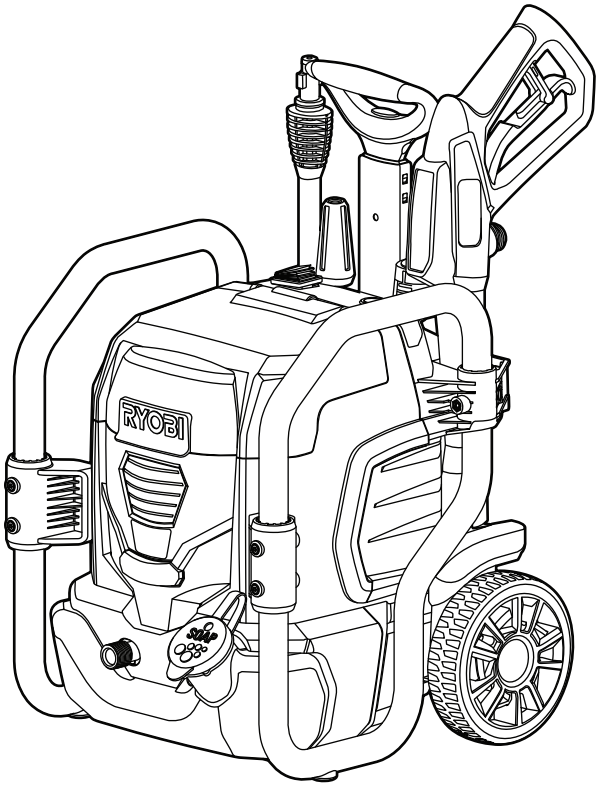
RYOBI

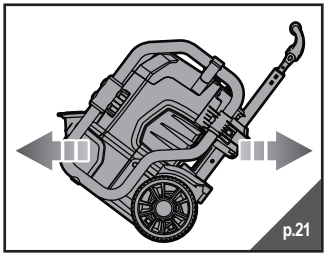
p.21

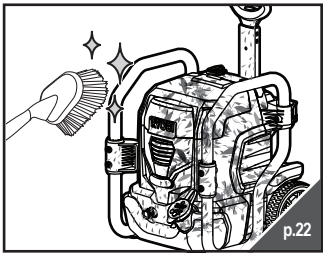
p.22

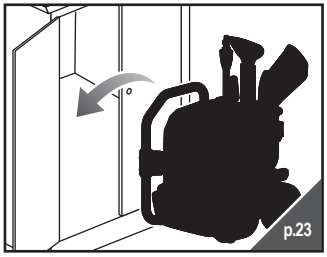
p.23

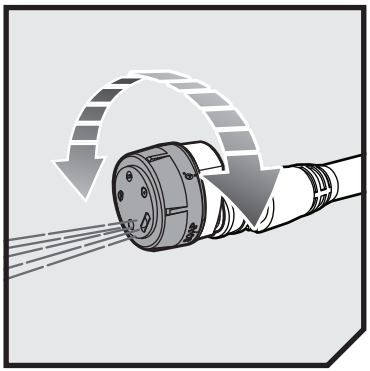

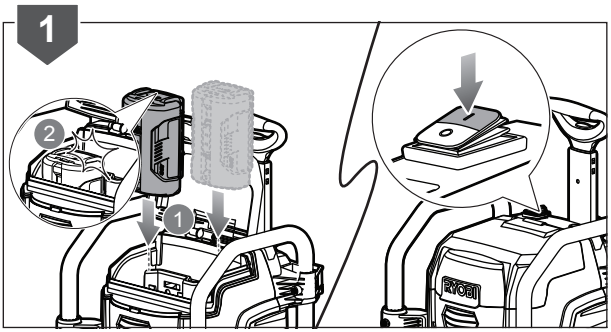
1
2
1
RYOBI

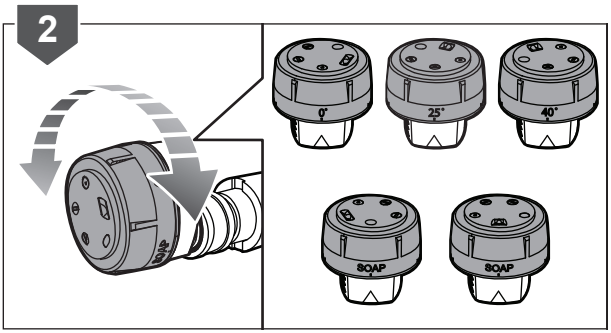
2
0°
25°
40°
SOAP
SOAP

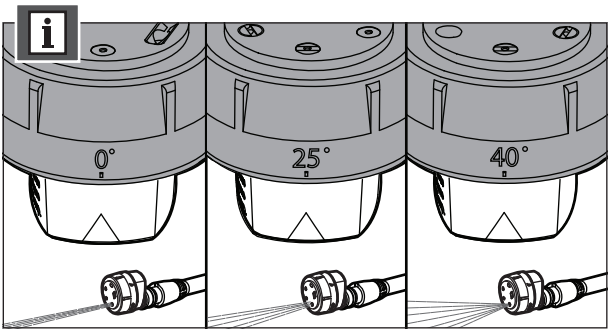
i
0°
25°
40°

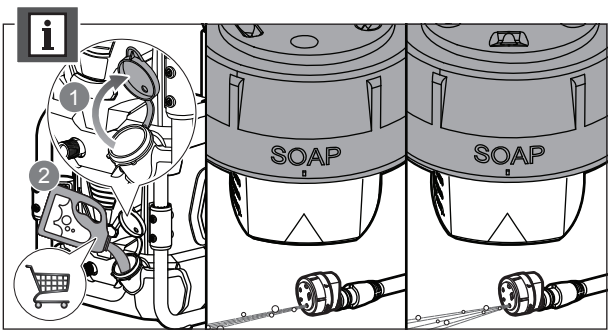
i
1
2
SOAP
SOAP

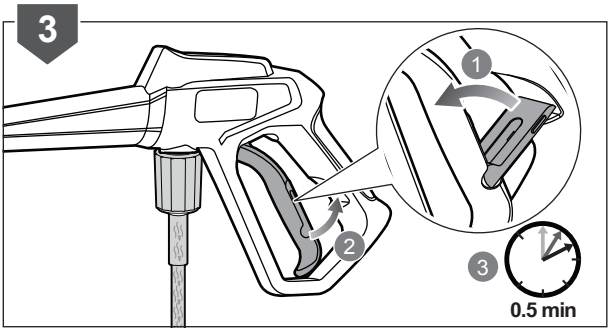
3
1
2
3
0.5 min

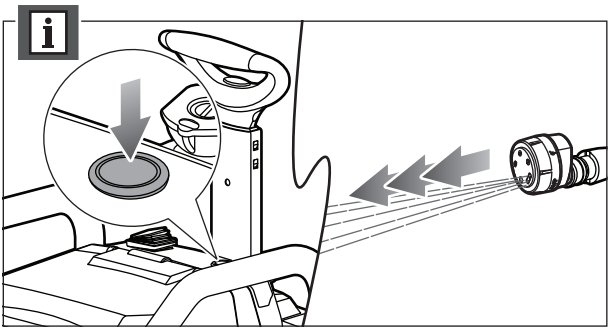
i

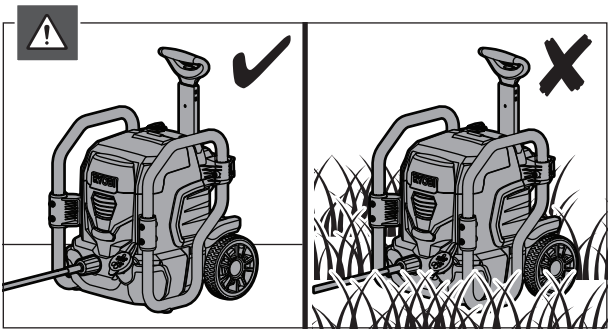

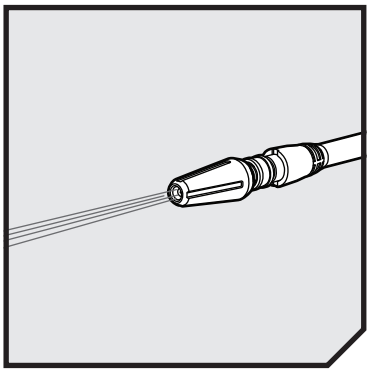

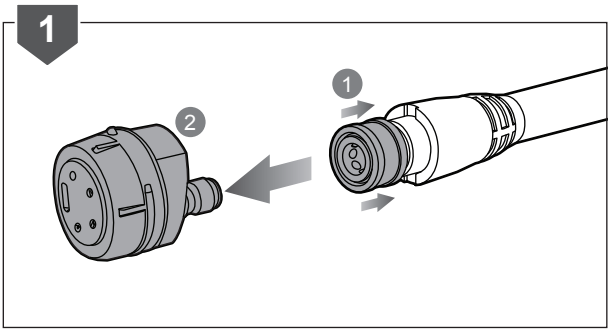
1
2
1
2

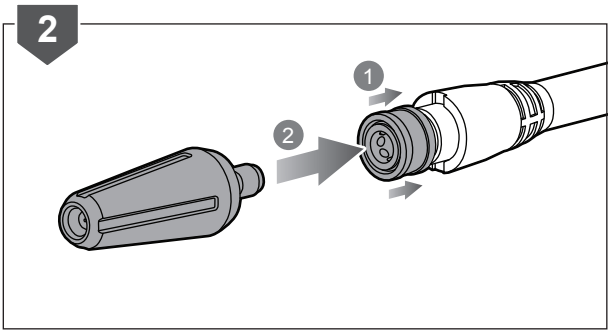
2
1
2

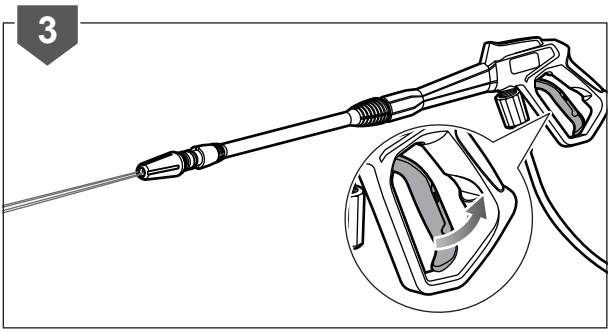
3

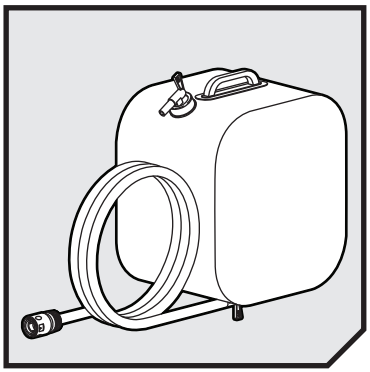

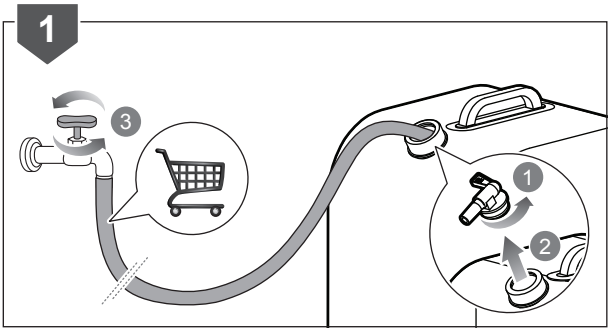
1
3
1
2

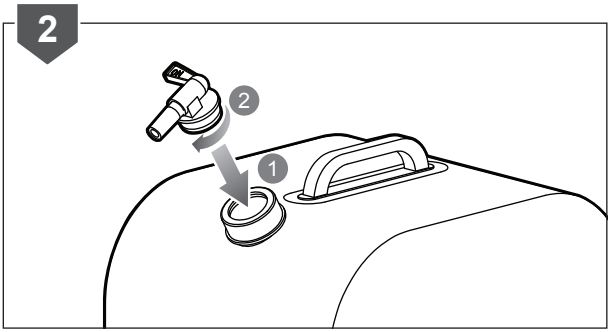
2
2
1

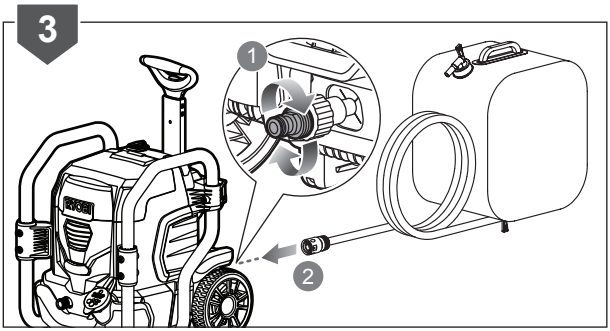
3
1
2

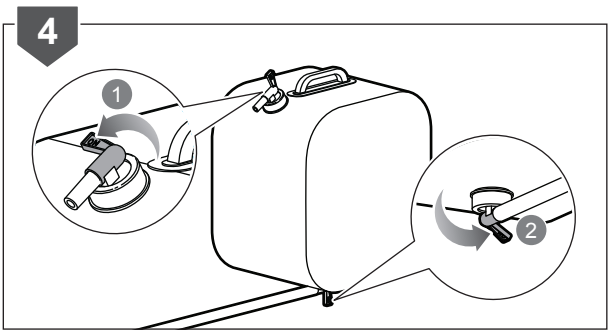
4
1
2

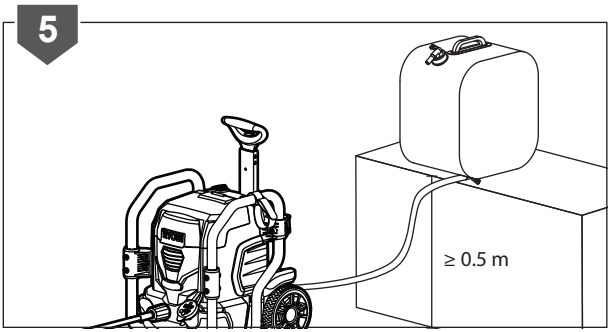
5
≥ 0.5 m

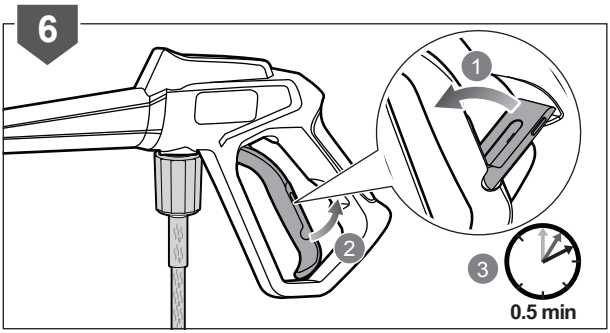
6
1
2
3
0.5 min

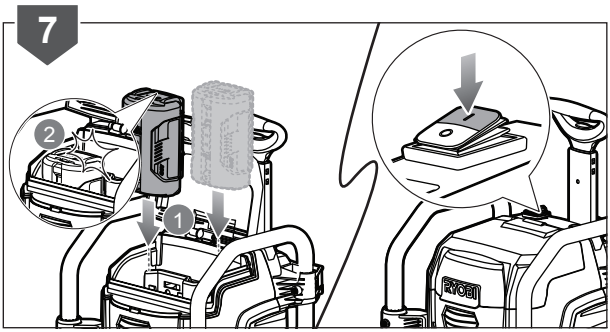
7
2
1
RYOBI

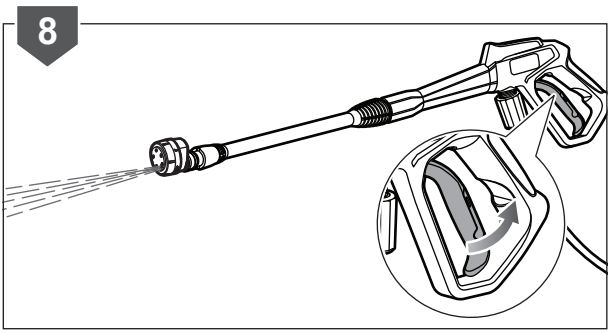
8

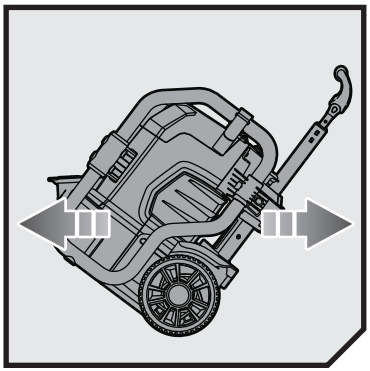

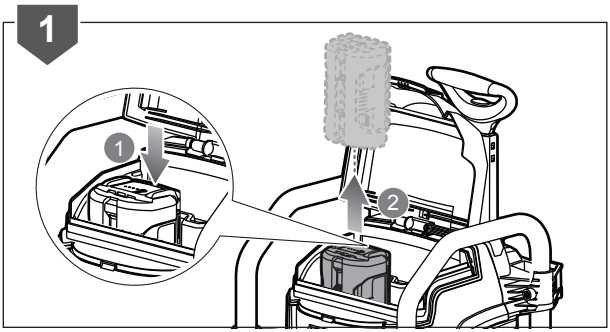
1
1
2

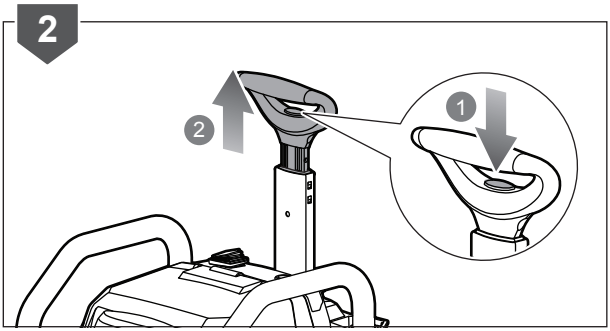
2
2
1

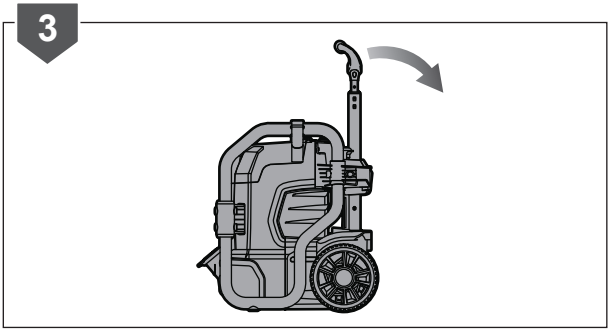
3

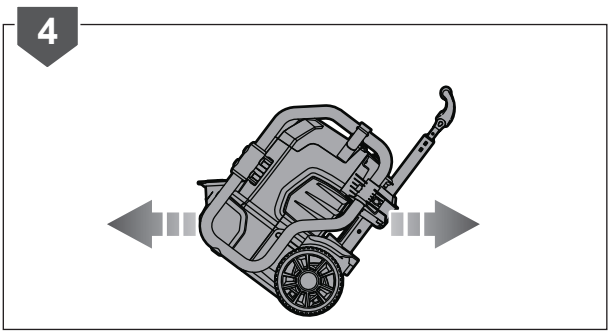
4

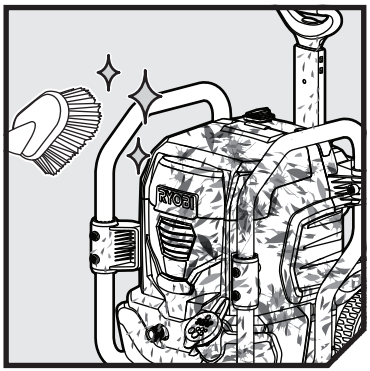

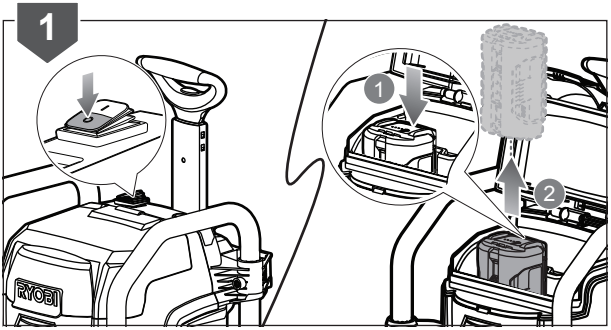
1
1
2

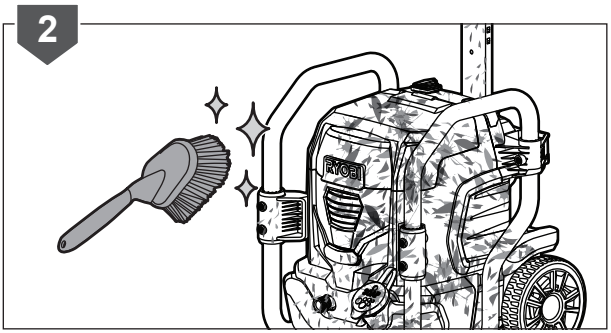
2

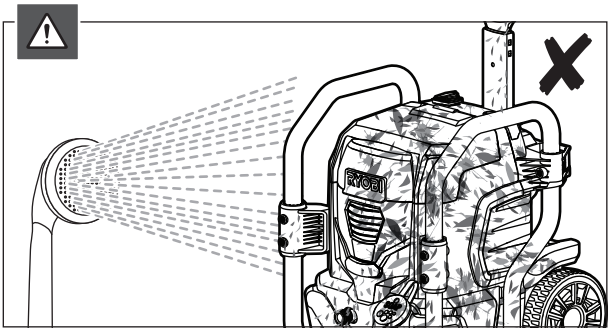

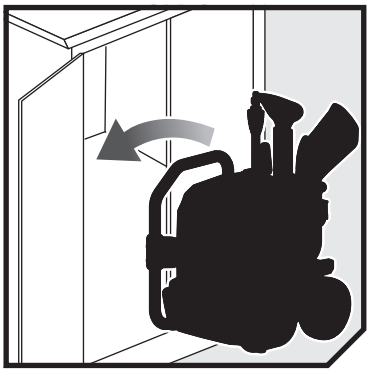

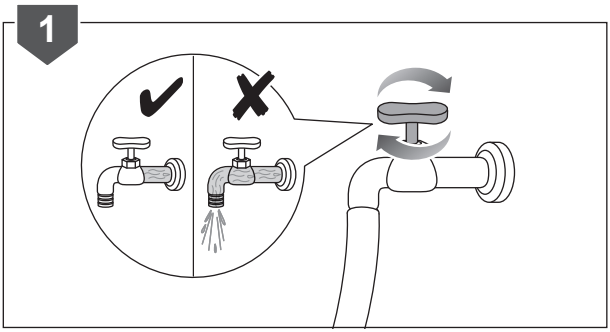
1

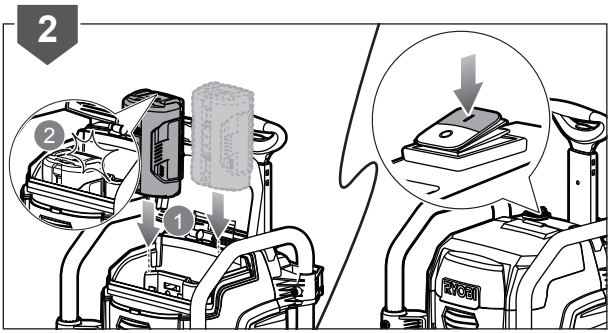
2
2
1
RYOBI

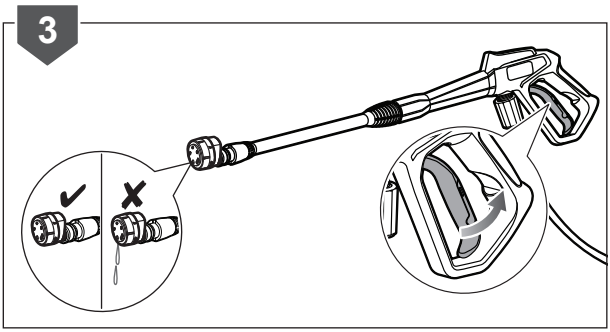
3

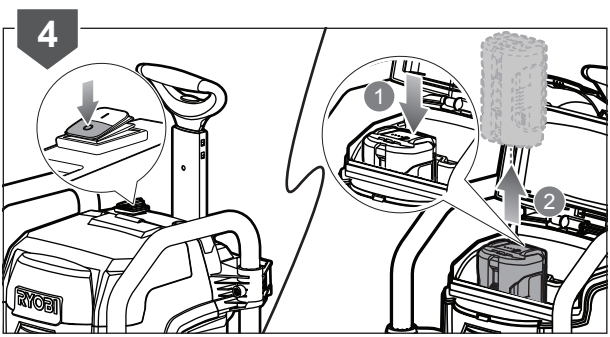
4
1
2
RYOBI

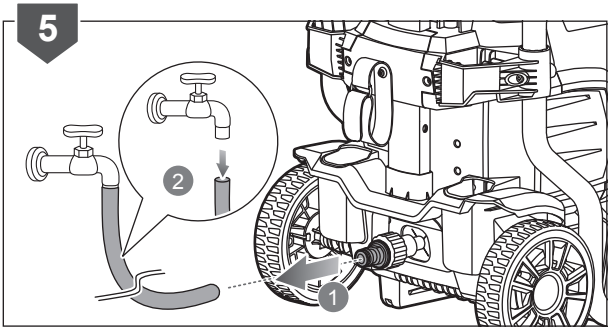

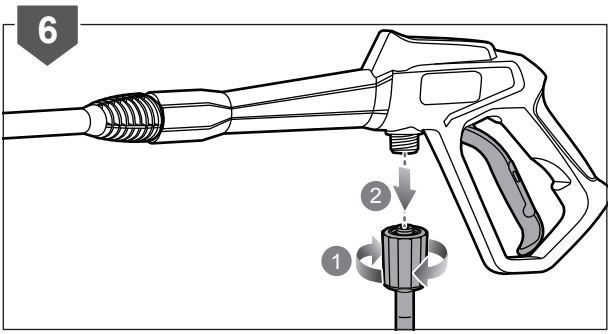

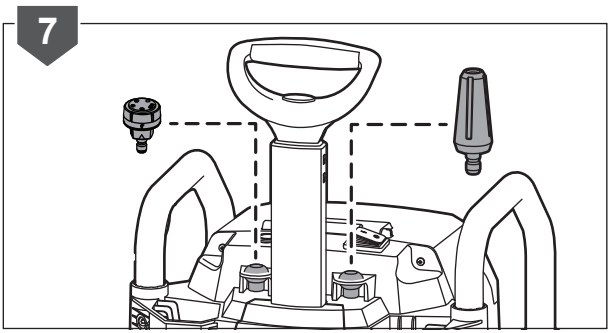

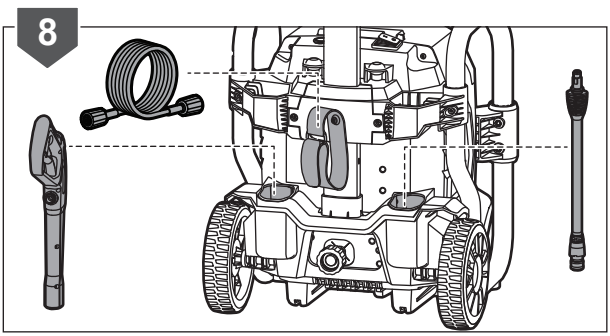

20170110v1_d8

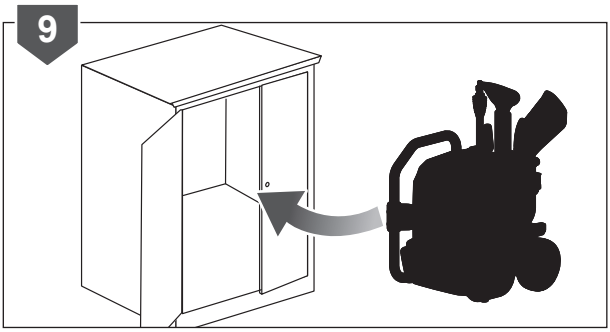
9

PRODUCT SPECIFICATIONS

Cordless high pressure cleaner	
Model	RPW36X120HI5/RPW36120HI
Rated voltage	36 VDC
Power	1 500 W
Maximum pressure	12,4 MPa (124 bar)
Rated pressure	
Boost	10,3 MPa (103 bar)
Normal	7,24 MPa (72,4 bar)
Degree of protection	IPX5
Dilution ratio	20:1
Rated flow	5,3 L/min (318 L/h)
Max. flow	6,0 L/min (360 L/h)
Max. inlet water pressure	0,7 MPa (7 bar)
High-pressure hose length	7.6 m
Weight	12 kg
Sound pressure level (in accordance with EN 60335-2-79)	66 dB(A)
Uncertainty	3 dB
Sound power level (in accordance with EN 60335-2-79)	79 dB(A)
Uncertainty	3 dB
Vibration value (in accordance with EN 60335-2-79)	< 2.5 m/s^2
Maximum garden hose length	15 m
Minimum garden hose diameter	18 mm (3/4")

BATTERY AND CHARGER

Model	RPW36X120HI5	RPW36120HI
Battery pack	BPL3650D	not included
Weight	1.5 kg	-
Charger	BCL3650F	not included
Weight	1.2 kg	-
Compatible battery pack	BPL3615, BPL3626, BPL3626D, BPL3640,BPL3640D, BPL3650, BPL3650D	
Compatible charger	BCL3620, BCL3620S, BCL3650F	

NOTE: Only battery pack model BPL3626D, BPL3640D, or BPL3650D allows the use of the boost mode functionality when installed to the high pressure cleaner.

REPLACEMENT PARTS

Trigger handle		5131040103
Spray wand		5131039406
5-in-1 nozzle	RAC714	5132003295
Turbo nozzle	RAC715	5132003296
High-pressure hose	RAC702	5132003283
Non-pressurised water source supply kit	RAC716	
Collapsible water tank with non-pressurised hose (25 L)	RAC717	

RYOBI® WARRANTY APPLICATION CONDITIONS

In addition to any statutory rights resulting from the purchase, this product is covered by a warranty as stated below.

1. The warranty period is 24 months for consumers and commences on the date the product was purchased. This date has to be documented by an invoice or other proof of purchase. The product is designed and dedicated to consumer and private use only. So there is no warranty provided in case of professional or commercial use. This warranty applies only on new products.
2. There is a possibility to extend for a part of the range of power tools (AC/DC) the warranty period over the period described above using the registration on the www.ryobitools.eu website. The eligibility of products for extended warranty is clearly displayed in stores and / or on packaging and is contained within the product documentation. The end user is required to register his/her newly-acquired products online within 30 days from the date of purchase. The end user may register for the extended warranty in his/her country of residence if listed on the online registration form where this option is valid. Furthermore, end users must give their consent to the storage of their personal data that is required to be entered online. They must also accept the terms and conditions. The registration confirmation receipt, which is sent out by e-mail, and the original invoice showing the date of purchase will serve as proof of the extended warranty.
3. The warranty covers all defects of the product during the warranty period due to faults in workmanship or material at the purchase date. The warranty is limited to repair and/or replacement and does not include any other obligations including but not limited to incidental or consequential damages. The warranty is not valid if the product has been misused, used contrary to the instruction manual, or has been incorrectly connected to a power supply. This warranty does not apply to:
   - any damage to the product that is the result of improper or lack of maintenance
   - any product that has been altered or modified
   - any product where original identification (trade mark, serial number) markings have been defaced, altered or removed
   - any damage caused by non-observance of the instruction manual
   - any product not displaying the CE approval mark on the rating plate
   - any product that has been attempted to be repaired by a non-authorised warranty service centre or without prior authorisation by Techtronic Industries
   - any product connected to an improper power supply (amps, voltage, frequency)
   - any product used with inappropriate fuel mixture (fuel, oil, Ratio of oil / fuel mixture)
   - any damage caused by external influences (water, chemical, physical, shocks) or foreign substances
   - normal wear and tear spare parts
   - inappropriate use, overloading of the tool
   - use of non-approved accessories or parts
   - Accessories provided with the tool or purchased separately including but not limited to blades, saw chains, cutting lines etc.
   - Any periodic adjustments to or maintenance cleaning of carburetors
   - Components (parts and accessories) subject to natural wear and tear, including but not limited to bump knobs, drive belts, clutch, blades of hedge trimmers or lawn mowers, harness, cable throttle, carbon brushes, power cord, tines, felt washers, hitch pins, blower fans, blower and vacuum tubes, vacuum bag and straps, guide bars, saw chains, hoses, connector fittings, spray nozzles, wheels, spray wands, inner reels, outer spools, cutting lines, spark plugs, air filters, gas filters, mulching blades, etc.
4. For servicing, the product must be sent or presented to a RYOBI authorised service station listed for each country in the following list of service station addresses. In some countries your local RYOBI dealer undertakes to send the product to the RYOBI service organisation. When sending a product to a RYOBI service station, the product should be safely packed without any dangerous contents such as petrol, marked with sender's address and accompanied by a short description of the fault.
5. A repair / replacement under this warranty is free of charge. It does not constitute an extension or a new start of the warranty period. Exchanged parts or products become our property. In some countries delivery charges or postage will have to be paid by the sender. Your statutory rights arising from the purchase of the product remain unaffected.
6. This warranty is valid in the European Community, Switzerland, Iceland, Norway, Liechtenstein, Turkey and Russia. Outside these areas, please contact your authorised RYOBI dealer to determine if another warranty applies.

AUTHORISED SERVICE CENTRES

ACD PLANT LTD
145 Southbank Road
Coundon
Coventry, West Midlands
CV6 1FG
Phone: 02476 594348
Email: danmcgunigle@acdplant.co.uk
Web: www.acdplant.co.uk

CBS Power Tools Limited
Unit 4, V P Square
Storeys Bar Rd, Fengate
Peterborough, Cambridgeshire
PE1 5YS
Phone: 01733 343031
Email: steve@cbspowertools.co.uk
Web: www.cbspowertools.com

C D Powertools
76 Old Road
Churwell Morley, Leeds
LS27 7TH
Phone: 0113 2718494
Email: info@cdpowertools.co.uk
Web: www.cdpowertools.co.uk

C J Sinclair Limited
44 Victoria Road
St Peters
Broadstairs, Kent
CT10 2UG
Phone: 01843 869400
Email: repairs@cjsinclairltd.co.uk
Web: www.cjsinclairltd.co.uk

Powertech Ind Ltd
Unit 2C, Ellison Road
Norwood Ind, Killamarsh
Sheffield, South Yorkshire
S21 2JG
Phone: 01142 474080
Email: stores@powertech-industrial.co.uk
Web: www.powertech-industrial.co.uk

RYCKO Technical Services LTD
104 Green Lane
St Albans, Herts
AL3 6EX
Phone: 08458 678790
Email: info@ryckotechnical.com
Web: www.ryckotechnical.com

ToolTech Industrial Equipment
227 E Dunhill Road, Macosquin
Coleraine, Co Londonderry
BT514LQ
Phone: 028 70359493
Email: john@tooltech.org.uk

For an updated list of authorised service centres, visit http://en.ryobitools.eu/header/service-and-support/service-agents.

DECLARATION OF CONFORMITY

Techtronic Industries GmbH
Max-Eyth-Straße 10, 71364 Winnenden, Germany

Herewith we declare that the product

Cordless High Pressure Cleaner
Brand: Ryobi
Model number: RPW36120HI/RPW36X120HI5
Serial number range: 46219901000001 - 46219901999999

is in conformity with the following European Directives and harmonised standards

2006/42/EC, 2014/30/EU, 2000/14/EC, 2005/88/EC, 2011/65/EU, EN 60335-1:2012+A11, EN 60335-2-79:2012, EN 62233:2008, EN 55014-1:2006+A1:2009+A2:2011, EN 55014-2:2015, EN 50581:2012

Measured sound power level: 79 dB(A)
Guaranteed sound power level: 79 dB(A)
Conformity assessment method to Annex V Directive 2000/14/EC amended by 2005/88/EC



CE

Sven Eschrich
Senior Director of Engineering - TTI Outdoor Power Division
Winnenden, Feb. 15, 2017

Authorised to compile the technical file:
Alexander Krug, Managing Director
Techtronic Industries GmbH
Max-Eyth-Straße 10, 71364 Winnenden, Germany

RYOBI

Techtronic Industries GmbH
Max-Eyth-Straße 10,
71364 Winnenden, Germany

960478042-01