ORIGINAL INSTRUCTIONS

# Cordless Chainsaw

**RCS18X3050**
**OCS1830**



**Important!**

It is essential that you read the instructions in this manual before assembling, operating and maintaining the product.

Subject to technical modification.

Safety, performance, and dependability have been given top priority in the design of your cordless chainsaw.

## INTENDED USE

The cordless chainsaw is only intended for use outdoors. For safety reasons the product must be adequately controlled by using two-handed operation at all times.

The product is designed for cutting branches, trunks, logs and beams of a diameter determined by the cutting length of the guide bar. It is only designed to cut wood. It is only to be used in domestic application by adults who have received adequate training on the hazards and preventative measures/actions to be taken while using it.

Do not use the product for any purpose not listed above. It is not to be used for professional tree services. The product is not to be used by children or by persons not wearing adequate personal protective equipment and clothing.

**⚠ WARNING**

When using the product, the safety rules must be followed. For your own safety and that of bystanders, you must read and fully understand these instructions before operating the product. You should attend a professionally organized safety course in the use, preventative actions, first-aid and maintenance of chainsaws. Please keep these instructions safe for later use.

**⚠ WARNING**

Chainsaws are potentially dangerous tools. Accidents involving the use of chainsaws often result in loss of limbs or death. It is not just the chainsaw that is the hazard. Falling branches, toppling trees, rolling logs can all kill. Diseased or rotting timber poses additional hazards. You should assess your capability of completing the task safely. If there is any doubt, leave it to a professional tree surgeon.

## GENERAL SAFETY WARNINGS

**⚠ WARNING**

**Read all safety warnings and all instructions.** Failure to follow the warnings and instructions may result in electric shock, fire and/or serious injury.

**Save all warnings and instructions for future reference**.

The term “power tool’’ in the warnings refers to your mains-operated (corded) power tool or battery-operated (cordless) power tool.

### WORK AREA SAFETY

- **Keep work area clean and well lit.** Cluttered or dark areas invite accidents.
- **Do not operate power tools in explosive atmospheres, such as in the presence of flammable liquids, gases or dust.** Power tools create sparks which may ignite the dust or fumes.
- **Keep children and bystanders away while operating a power tool.** Distractions can cause you to lose control.

### ELECTRICAL SAFETY

- **Power tool plugs must match the outlet. Never modify the plug in any way. Do not use any adapter plugs with earthed (grounded) power tools.** Unmodified plugs and matching outlets will reduce risk of electric shock.
- **Avoid body contact with earthed or grounded surfaces, such as pipes, radiators, ranges and refrigerators.** There is an increased risk of electric shock if your body is earthed or grounded.
- **Do not expose power tools to rain or wet conditions.** Water entering a power tool will increase the risk of electric shock.
- **Do not abuse the cord. Never use the cord for carrying, pulling or unplugging the power tool. Keep cord away from heat, oil, sharp edges or moving parts.** Damaged or entangled cords increase the risk of electric shock.
- **When operating a power tool outdoors, use an extension cord suitable for outdoor use.** Use of a cord suitable for outdoor use reduces the risk of electric shock.
- **If operating a power tool in a damp location is unavoidable, use a residual current device (RCD) protected supply.** Use of an RCD reduces the risk of electric shock.

### PERSONAL SAFETY

- **Stay alert, watch what you are doing and use common sense when operating a power tool. Do not use a power tool while you are tired or under the influence of drugs, alcohol or medication.** A moment of inattention while operating power tools may result in serious personal injury.
- **Use personal protective equipment. Always wear eye protection.** Protective equipment such as dust mask, non-skid safety shoes, hard hat or hearing protection used for appropriate conditions will reduce personal injuries.
- **Prevent unintentional starting. Ensure the switch is in the off-position before connecting to power source and/or battery pack, picking up or carrying the tool.** Carrying power tools with your finger on the switch or energising power tools that have the switch on invites accidents.
- **Remove any adjusting key or wrench before turning the power tool on.** A wrench or a key left attached to a rotating part of the power tool may result in personal injury.
- **Do not overreach. Keep proper footing and balance at all times.** This enables better control of the power tool in unexpected situations.
- **Dress properly. Do not wear loose clothing or jewellery. Keep your hair, clothing and gloves away from moving parts.** Loose clothes, jewellery or long hair can be caught in moving parts.
- **If devices are provided for the connection of dust extraction and collection facilities, ensure these are**

**connected and properly used.** Use of dust collection can reduce dust-related hazards.

**POWER TOOL USE AND CARE**

- **Do not force the power tool. Use the correct power tool for your application.** The correct power tool will do the job better and safer at the rate for which it was designed.
- **Do not use the power tool if the switch does not turn it on and off.** Any power tool that cannot be controlled with the switch is dangerous and must be repaired.
- **Disconnect the plug from the power source and/or the battery pack from the power tool before making any adjustments, changing accessories or storing power tools.** Such preventive safety measures reduce the risk of starting the power tool accidentally.
- **Store idle power tools out of the reach of children and do not allow persons unfamiliar with the power tool or these instructions to operate the power tool.** Power tools are dangerous in the hands of untrained users.
- **Maintain power tools. Check for misalignment or binding of moving parts, breakage of parts and any other condition that may affect the power tool's operation. If damaged, have the power tool repaired before use.** Many accidents are caused by poorly maintained power tools.
- **Keep cutting tools sharp and clean.** Properly maintained cutting tools with sharp cutting edges are less likely to bind and are easier to control.
- **Use the power tool, accessories and tool bits etc, in accordance with these instructions, taking into account the working conditions and the work to be performed.** Use of the power tool for operations different from those intended could result in a hazardous situation.

**BATTERY TOOL USE AND CARE**

- **Recharge only with the charger specified by the manufacturer.** A charger that is suitable for one type of battery pack may create a risk of fire when used with another battery pack.
- **Use power tools only with specifically designated battery packs.** Use of any other battery packs may create a risk of injury and fire
- **When battery pack is not in use, keep it away from other metal objects, like paper clips, coins, keys, nails, screws or other small metal objects, that can make a connection from one terminal to another.** Shorting the battery terminals together may cause burns or a fire.
- **Under abusive conditions, liquid may be ejected from the battery; avoid contact. If contact accidentally occurs, flush with water. If liquid contacts eyes, additionally seek medical help.** Liquid ejected from the battery may cause irritation or burns.

**SERVICE**

- **Have your power tool serviced by a qualified repair person using only identical replacement parts.** This will ensure that the safety of the power tool is maintained.

**ADDITIONAL GENERAL SAFETY WARNINGS**

- Some regions have regulations that restrict the use of the product. Check with your local authority for advice.
- Never allow children or people unfamiliar with the instructions to use the product. Local regulations may restrict the age of the operator.
- Ensure before each use that all controls and safety devices function correctly. Do not use the product if the "off" switch does not stop the motor.
- Wear full eye and hearing protection, strong sturdy boots and gloves, as well as head protection while operating the product. Use a face mask if operation is dusty.
- Use of hearing protection reduces the ability to hear warnings (shouts or alarms). The operator must pay extra attention to what is going on in the work area.
- Keep firm footing and balance. Do not overreach. Overreaching can result in loss of balance and can increase the risk of kickback.
- Do not wear loose fitting clothing, short trousers, or jewellery of any kind.
- Secure long hair so it is above shoulder level to prevent entanglement in moving parts.
- Beware of thrown, flying, or falling objects. Keep all bystanders, children, and animals at least 15 m away from the work area.
- Do not operate in poor lighting. The operator requires a clear view of the work area to identify potential hazards.
- Operating similar tools nearby increases both the risk of hearing injury and the potential for other persons to enter your work area.
- Keep all parts of your body away from any moving part.
- Inspect the product before each use. Check for correct operation of all controls, including the chain brake. Check for loose fasteners, make sure all guards and handles are properly and securely attached. Replace any damaged parts before use.
- Do not modify the product in any way or use parts and accessories which are not recommended by the manufacturer.

**⚠ WARNING**

If the product is dropped, suffers heavy impact or begins to vibrate abnormally, immediately stop the product and inspect for damage or identify the cause of the vibration. Any damage should be properly repaired or replaced by an authorised service centre.

## CHAINSAW SAFETY WARNINGS

- **Keep all parts of the body away from the saw chain when the chainsaw is operating. Before you start the chainsaw, make sure the saw chain is not contacting anything.** A moment of inattention while operating chainsaws may cause entanglement of your clothing or body with the saw chain.
- **Always hold the chainsaw with your right hand**

**on the rear handle and your left hand on the front handle.** Holding the chainsaw with a reversed hand configuration increases the risk of personal injury and should never be done.

- **Hold the power tool by insulated gripping surface only, because the saw chain may contact hidden wiring.** Saw chains contacting a “live” wire may make exposed metal parts of the power tool “live” and could give the operator an electric shock.
- **Wear safety glasses and hearing protection. Further protective equipment for head, hands, legs and feet is recommended.** Adequate protective clothing will reduce personal injury by flying debris or accidental contact with the saw chain.
- **Do not operate a chainsaw in a tree.** Operation of a chainsaw while up in a tree may result in personal injury.
- **Always keep proper footing and operate the chainsaw only when standing on fixed, secure and level surface.** Slippery or unstable surfaces such as ladders may cause a loss of balance or control of the chainsaw.
- **When cutting a limb that is under tension be alert for spring back.** When the tension in the wood fibres is released the spring loaded limb may strike the operator and/or throw the chainsaw out of control.
- **Use extreme caution when cutting brush and saplings.** The slender material may catch the saw chain and be whipped toward you or pull you off balance.
- **Carry the chainsaw by the front handle with the chainsaw switched off and away from your body. When transporting or storing the chainsaw always fit the guide bar cover.** Proper handling of the chainsaw will reduce the likelihood of accidental contact with the moving saw chain.
- **Follow instructions for lubricating, chain tensioning and changing accessories.** Improperly tensioned or lubricated chain may either break or increase the chance for kickback.
- **Keep handles dry, clean, and free from oil and grease.** Greasy, oily handles are slippery causing loss of control.
- **Cut wood only. Do not use chainsaw for purposes not intended. For example: do not use chainsaw for cutting plastic, masonry or non-wood building materials.** Use of the chainsaw for operations different than intended could result in a hazardous situation.

**Causes and operator prevention of kickback:**

Kickback may occur when the nose or tip of the guide bar touches an object, or when the wood closes in and pinches the saw chain in the cut.

Tip contact in some cases may cause a sudden reverse reaction, kicking the guide bar up and back towards the operator.

Pinching the saw chain along the top of the guide bar may push the guide bar rapidly back towards the operator.

Either of these reactions may cause you to lose control of the saw which could result in serious personal injury. Do not rely exclusively upon the safety devices built into your saw. As a chainsaw user, you should take several steps to keep your cutting jobs free from accident or injury.

Kickback is the result of tool misuse and/or incorrect operating procedures or conditions and can be avoided by taking proper precautions as given below:

- **Maintain a firm grip, with thumbs and fingers encircling the chainsaw handles, with both hands on the saw and position your body and arm to allow you to resist kickback forces.** Kickback forces can be controlled by the operator, if proper precautions are taken. Do not let go of the chainsaw.
- **Do not overreach and do not cut above shoulder height.** This helps prevent unintended tip contact and enables better control of the chainsaw in unexpected situations.
- **Only use replacement bars and chains specified by the manufacturer.** Incorrect replacement bars and chains may cause chain breakage and/or kickback.
- **Follow the manufacturer’s sharpening and maintenance instructions for the saw chain.** Decreasing the depth gauge height can lead to increased kickback.

**ADDITIONAL CHAINSAW SAFETY WARNINGS**

- It is recommended to cut logs on a saw-horse or cradle when operating the product the first time.
- Ensure all guards, handles and spiked bumper are properly fitted and are in good condition.
- Persons using this chainsaw should be in good health. The chainsaw is a heavy unit so the operator requires to be physically fit. The operator should be alert, have good vision, mobility, balance and manual dexterity. If there is any doubt, do not operate the chainsaw.
- Do not start using the product until you have a clear work area, secure footing, and a planned retreat path away from the falling tree.
- Beware of the emission of lubricant mist and saw dust. Wear a mask or respirator if required.
- Do not cut vines and/or small undergrowth (less than 75 mm in diameter).
- Always hold the chainsaw with both hands when operating the saw. Use a firm grip with thumbs and fingers encircling the chainsaw handles. Right hand must be on the rear handle and left hand on the front handle.
- Before starting the tool, make sure the saw chain is not contacting any object.
- Do not modify your tool in any way or use it to power any attachments or devices not recommended by the manufacturer for your saw.
- There should be a first-aid kit containing large wound dressings and a means to summon attention (e.g., whistle) close to the operator. A larger more comprehensive kit should be reasonably nearby.
- The operator may be tempted to remove the helmet if there is no danger of falling objects in the work area, but remember the helmet, particularly with the mesh visor, can help reduce the potential for injury to the face and head if kickback occurs.
- An incorrectly tensioned chain can jump off the guide

bar and could result in serious injury or fatality. The length of chain depends on the temperature. Check the tension frequently.

- You should get used to your new chainsaw by making simple cuts on securely supported wood. Do this whenever you have not operated the saw for some time.
- To reduce the risk of injury associated with contacting moving parts, always stop the motor, apply chain brake, remove the battery pack and make sure all moving parts have come to a stop before:
  - cleaning or clearing a blockage
  - leaving the product unattended
  - installing or removing attachments
  - checking, maintenance or working on the product
- The size of the work area depends on the job being performed as well as the size of the tree or work piece involved. For example, felling a tree requires a larger work area than making other cuts, i.e., bucking cuts, etc. The operator needs to be aware and in control of everything happening in this work area.
- Do not cut with your body in line with the guide bar and chain. If you do experience kickback this will help prevent the chain coming into contact with your head or body.
- Do not use a back and forward sawing motion, let the chain do the work, keep the chain sharp and don't try to push the chain through the cut.
- Do not put pressure on the saw at the end of the cut. Be ready to take on the weight of the saw as it cuts free from the wood. Failure to do so could result in possible serious personal injury.
- Do not stop the saw in the middle of a cutting operation. Keep the saw running until it is already removed from the cut.

**Push and pull**

The reaction force is always opposite to the direction the chain is moving. Thus, the operator must be ready to control the tendency for the machine to pull away (forward motion) when cutting on the bottom edge of the bar and the push backwards (towards the operator) when cutting along the top edge.

**Saw jammed in the cut**

Stop the chainsaw and make it safe. Do not try to force the chain and bar out of the cut as this is likely to break the chain which may swing back and strike the operator. This situation normally occurs because the wood is incorrectly supported and forcing the cut to close under compression thereby pinching the blade. If adjusting the support does not release the bar and chain, use wooden wedges or a lever to open the cut and release the saw. Never try to start the chainsaw when the guide bar is already in a cut or kerf.

**Personal protective equipment**

Good quality, personal protective equipment as used by professionals will help to reduce the risk of injury to the operator. The following items should be used when operating your chainsaw:

**Safety helmet**

- should comply with EN 397 and be CE marked

**Hearing protection**

- should comply with EN 352-1 and be CE marked

**Eye and face protection**

- should be CE marked and comply with EN 166 (for safety glasses) or EN 1731 (for mesh visors)

**Gloves**

- should comply with EN381-7 and be CE marked

**Leg protection (chaps)**

- should comply with EN381-5, be CE marked and provide all-round protection.

**Chainsaw safety boots**

- should comply with EN ISO 20345:2004 and be marked with a shield depicting a chainsaw to show compliance with EN 381-3. (Occasional users may use steel toe-cap safety boots with protective gaiters which conform to EN 381-9 if the ground is even and there is little risk of tripping or catching on undergrowth)

**Chainsaw jackets for upper body protection**

- should comply with EN 381-11 and be CE marked

**INSTRUCTIONS CONCERNING THE PROPER TECHNIQUES FOR BASIC FELLING, LIMBING, AND CROSS-CUTTING**

**Understanding the forces within the wood**

When you understand the directional pressures and stresses inside the wood you can reduce the "pinches" or at least expect them during your cutting. Tension in the wood means the fibers are being pulled apart and if you cut in this area the "kerf" or cut will tend to open as the saw goes through. If a log is being supported on a saw horse and the end is hanging unsupported over the end then tension is created on the upper surface due to the weight of the overhanging log stretching the fibers. Likewise, the underside of the log will be in compression and the fibers are being pushed together. If a cut is made in this area the kerf will have the tendency to close up during the cut. This would pinch the blade.

**Felling a tree**

*See page 17 - 18.*

When bucking and felling operations are being performed by two or more persons at the same time, the felling operations should be separated from the bucking operation by a distance of at least twice the height of the tree being felled. Trees should not be felled in a manner that would endanger any person, strike any utility line or cause any property damage. If the tree does make contact with any utility line, the company should be notified immediately.

The chainsaw operator should keep on the uphill side of the terrain as the tree is likely to roll or slide downhill after it is felled.

An escape path should be planned and cleared as necessary before cuts are started. The escape path should extend back and diagonally to the rear of the expected line of fall.

Before felling is started, consider the natural lean of the tree, the location of larger branches and the wind direction to judge which way the tree will fall.

Remove dirt, stones, loose bark, nails, staples and wire from the tree.

Do not attempt to fell trees which are rotten or have been damaged by wind, fire, lightning, etc. This is extremely dangerous and should only be completed by professional tree surgeons.

1. **Notching undercut**
   *See page 17 - 18.*
   Make the notch 1/3 the diameter of the tree, perpendicular to the direction of falls. Make the lower horizontal notching cut first. This will help to avoid pinching either the saw chain or the guide bar when the second notch is being made.
2. **Felling back cut**
   *See page 17 - 18.*
   Make the felling back cut at least 50 mm/2 in higher than the horizontal notching cut. Keep the felling back cut parallel to the horizontal notching cut. Make the felling back cut so enough wood is left to act as a hinge. The hinge wood keeps the tree from twisting and falling in the wrong direction. Do not cut through the hinge.
   As the felling gets close to the hinge, the tree should begin to fall. If there is any chance that the tree may not fall in desired direction or it may rock back and bind the saw chain, stop cutting before the felling back cut is complete and use wedges of wood, plastic or aluminium to open the cut and drop the tree along the desired line of fall.
   When the tree begins to fall remove the chainsaw from the cut, stop the motor, put the chainsaw down, then use the retreat path planned. Be alert for overhead limbs falling and watch your footing.

**Removing buttress roots**

*See page 18.*

A buttress root is a large root extending from the trunk of the tree above the ground. Remove large buttress roots prior to felling. Make the horizontal cut into the buttress first, followed by the vertical cut. Remove the resulting loose section from the work area. Follow the correct tree felling procedure after you have removed the large buttress roots.

**Bucking a log**

*See page 19.*

Bucking is cutting a log into lengths. It is important to make sure your footing is firm and your weight is evenly distributed on both feet. When possible, the log should be raised and supported by the use of limbs, logs or chocks. Follow the simple directions for easy cutting. When the log is supported along its entire length, it is cut from the top (overbuck).

When the log is supported on one end, cut 1/3 the diameter from the underside (underbuck). Then make the finished cut by overbucking to meet the first cut.

When the log is supported on both ends, cut 1/3 the diameter from the top (overbuck). Then make the finished cut by underbucking the lower 2/3 to meet the first cut.

When bucking on a slope always stand on the uphill side of the log. When “cutting through”, to maintain complete control release the cutting pressure near the end of the cut without relaxing your grip on the chainsaw handles. Don’t let the chain contact the ground. After completing the cut, wait for the saw chain to stop before you move the chainsaw. Always stop the motor before moving from tree to tree.

**Limbing a tree**

*See page 20.*

Limbing is removing the branches from a fallen tree. When limbing leave larger lower limbs to support the log off the ground. Remove the small limbs in one cut. Branches under tension should be cut from the bottom up to avoid binding the chainsaw.

**Springpoles**

*See page 20.*

A springpole is any log, branch, rooted stump, or sapling which is bent under tension by other wood so that it springs back if the wood holding it is cut or removed.

On a fallen tree, a rooted stump has a high potential of springing back to the upright position during the bucking cut to separate the log from the stump. Watch out for springpoles—they are dangerous.

**⚠ WARNING**

Springpoles are dangerous and could strike the operator, causing the operator to lose control of the chainsaw. This could result in severe or fatal injury to the operator. This should be done by trained users.

## ADDITIONAL BATTERY SAFETY WARNINGS

**⚠ WARNING**

To reduce the risk of fire, personal injury, and product damage due to a short circuit, never immerse your tool, battery pack or charger in fluid or allow a fluid to flow inside them. Corrosive or conductive fluids, such as seawater, certain industrial chemicals, and bleach or bleach-containing products, etc., can cause a short circuit.

## RESIDUAL RISKS

Even when the product is used as prescribed, it is still impossible to completely eliminate certain residual risk factors. The following hazards may arise in use and the operator should pay special attention to avoid the following:

- Injury caused by vibration
  - Always use the right tool for the job, use designated handles and restrict working time and exposure.
- Damage to hearing due to exposure to noise
  - Wear hearing protection and limit exposure.
- Injury caused by contact with exposed saw teeth of the chain
- Injury caused by thrown-out pieces of the workpiece (wood chips, splinters)
- Injury caused by dust and particles
- Injury to the skin caused by contact with lubricants
- Parts ejected from the saw chain (cutting/injection hazards)

- Unforeseen, abrupt movement, or kickback of the guide bar (cutting hazards)

## RISK REDUCTION

It has been reported that vibrations from hand-held tools may contribute to a condition called Raynaud's Syndrome in certain individuals. Symptoms may include tingling, numbness and blanching of the fingers, usually apparent upon exposure to cold. Hereditary factors, exposure to cold and dampness, diet, smoking and work practices are all thought to contribute to the development of these symptoms. There are measures that can be taken by the operator to possibly reduce the effects of vibration:

- Keep your body warm in cold weather. When operating the unit wear gloves to keep the hands and wrists warm. It is reported that cold weather is a major factor contributing to Raynaud's Syndrome.
- After each period of operation, exercise to increase blood circulation.
- Take frequent work breaks. Limit the amount of exposure per day.
- Protective gloves available from professional chainsaw retailers are designed specifically for chainsaw use which give protection, good grip and also reduce the effect of handle vibration. These gloves should comply with EN381-7 and must be CE marked.

If you experience any of the symptoms of this condition, immediately discontinue use and see your physician.

**⚠ WARNING**

Injuries may be caused, or aggravated, by prolonged use of a tool. When using any tool for prolonged periods, ensure you take regular breaks.

## KNOW YOUR PRODUCT

*See page 11.*

1. Front hand guard/Chain brake
2. Front handle
3. Rear handle
4. Chain
5. Guide bar
6. Spiked bumper
7. Chain lubricant cap
8. Trigger release
9. Switch trigger
10. Sprocket cover
11. Chain tensioner adjustment ring
12. Chain tensioner knob
13. Guide bar cover
14. Chain catcher

### SAFETY DEVICES

#### Low kickback saw chain

A low-kick-back saw chain helps to reduce the possibility of a kickback event.

The rakers (depth gauges) ahead of each cutter can minimize the force of a kickback reaction by preventing the cutters from digging in too deeply. Only use replacement guide bar and chain combinations recommended by the manufacturer.

As saw chains are sharpened, they lose some of the low kickback qualities and extra caution is required. For your safety, replace saw chains when cutting performance decreases.

#### Spiked bumper

The integral bumper spike may be used as a pivot when making a cut. It helps to keep the body of the chainsaw steady while cutting. When cutting, push the machine forward until the spikes dig into the edge of the wood, then by moving the rear handle up or down in the direction of the cutting line it can help ease the physical strain of cutting

#### Guide bars

Generally, guide bars with small radius tips have somewhat lower potential for kickback. You should use a guide bar and matching chain which is just long enough for the job. Longer bars increase the risk of loss of control during sawing. Regularly check the chain tension. When cutting smaller branches (less than the full length of the guide bar) the chain is more likely to be thrown off if the tension is not correct.

#### Chain brake

Chain brakes are designed to quickly stop the chain rotating. When the chain brake lever/hand guard is pushed towards the bar, the chain should stop immediately. A chain brake does not prevent kickback. It only lowers the risk of injury should the chain bar contact the operator's body during a kickback event. The chain brake should be tested before each use for correct operation in both the run and brake positions.

#### Chain catcher

A chain catcher prevents the saw chain from being thrown back towards the operator if the saw chain comes loose or breaks.

## ASSEMBLY

**⚠ WARNING**

If any parts are damaged or missing do not operate this product until the parts are replaced. Failure to heed this warning could result in serious personal injury.

### ASSEMBLING SAW CHAIN AND GUIDE BAR

*See page 12 - 13.*

1. Make sure to remove the battery pack from the product. Wear protective gloves.
2. Unscrew the chain tensioner knob and remove the sprocket cover.
3. The saw chain should face in the direction of chain rotation. If they face backwards, turn the loop over.
4. Place the chain drive links into the bar groove.
5. Position the chain so there is a loop at the back of the bar.
6. Hold the chain in position on the bar and place the loop around the drive sprocket. Lower the bar so that the bolt goes through the hole in the attached chain tension

assembly. You may need to rotate this assembly so the bolt and hole align. You may rotate this assembly again to apply some tension to the chain which will help keep it in place.
7. Replace the sprocket cover and turn the chain tensioner knob until nearly tight, turn the chain tension adjustment ring until the saw chain is properly tensioned. The guide bar must then be pushed upwards, check chain tension again, do not tension the chain too tight.
8. After the chain is well-tensioned, tighten the knob again.

### ADJUSTING THE CHAIN TENSION

*See page 13. See page 23.*

1. Loosen the chain tensioner knob slightly by turning it counterclockwise.
2. To increase the chain tension, turn the chain tensioner adjustment ring clockwise and check the chain tension frequently. To reduce the chain tension, turn the chain tensioner adjustment ring counterclockwise and check the chain tension frequently.
3. The chain tension is correct when the gap between the cutter in the chain and the bar is between 4 mm - 5.5 mm. Pull the chain in the middle of the lower side of the bar downwards (away from the bar) and measure the distance between the bar and the chain cutters.
4. Tighten the chain tensioner knob by turning it clockwise.

## OPERATION

### ADDING CHAIN LUBRICATING OIL

*See page 12.*

**⚠ WARNING**

Never work without chain lubricant. If the saw chain is running without lubricant, guide bar and saw chain can be damaged. It is therefore essential to check the oil level in the oil level gauge frequently and every time before starting to use the chain saw.

1. Clear surface around the oil cap to prevent contamination.
2. Unscrew and remove the cap from the oil tank.
3. Pour the oil into the oil tank and monitor the oil level gauge. Ensure that no dirt enters the oil tank while filling.
4. Put the oil cap back on and tighten it up. Wipe away any spillage.
5. One full oil tank will enable you to use the saw for 20-40 min.

#### Recommended chain lubricating oil

- The manufacturer recommends you use only Ryobi chainsaw lubricating oil. (Available from your authorised Ryobi service centre)

### INSTALLING THE BATTERY PACK

*See page 13.*

1. Place the battery pack in the chainsaw. Align raised ribs on battery pack with grooves in the chain saw's battery port.
2. Make sure the latches on the battery pack snap in place and that the battery pack is secured in the chainsaw before beginning operation.

### HOLDING THE CHAIN SAW

*See page 13.*

Always hold the chain saw with your right hand at the rear handle and your left hand at the front handle. Grip both handles with the thumbs and fingers encircling the handles. Ensure that your left hand is holding the front handle so that your thumb is underneath.

### STARTING THE CHAIN SAW

*See page 13.*

1. Before starting for operation, you should install the battery pack in the product, and make sure chain brake is in run position by pulling chain brake lever /hand guard toward the front handle.
2. To start the product: pull the trigger release, and then press the switch trigger.

### CHECKING AND OPERATING CHAIN BRAKE

1. Engage the chain brake by rotating your left hand around the front handle. Allow the back of your hand to push the chain brake lever/hand guard toward the bar while the chain is rotating rapidly. Be sure to maintain both hands on the saw handles at all times.
2. Reset the chain brake back into the Run position by grasping the top of the chain brake lever / hand guard and pulling toward the front handle until you hear a click.

**⚠ WARNING**

If the chain brake does not stop the chain immediately, or if the chain brake will not stay in the run position without assistance, take the saw to an authorised service centre for repair prior to use.

## TRANSPORTATION AND STORAGE

*See page 25, 26.*

- Stop the product, remove the battery pack, and allow the product to cool down before storing or transporting.
- Clean all foreign material from the product. Store it in a cool dry and well-ventilated place that is inaccessible to children. Keep away from corrosive agents, such as garden chemicals and de-icing salts. Do not store outdoors.
- Fit the guide bar cover before storing the product or during transportation.
- For transportation, secure the product against movement or falling to prevent injury to persons or damage to the product.

### TRANSPORTING LITHIUM BATTERIES

Transport the battery in accordance with local and national provisions and regulations.

Follow all special requirements on packaging and labelling when transporting batteries by a third party. Ensure that no batteries can come in contact with other batteries or conductive materials while in transport by protecting

exposed connectors with insulating, non-conductive caps or tape. Do not transport batteries that are cracked or leaking. Check with the forwarding company for further advice.

## MAINTENANCE

**⚠ WARNING**

Use only original manufacturer's replacement parts, accessories and attachments. Failure to do so can cause possible injury, contribute to poor performance, and may void your warranty.

**⚠ WARNING**

Servicing requires extreme care and knowledge and should be performed only be a qualified service technician. For service, bring the product to an authorised service centre for repair. When servicing, use only original replacement parts.

**⚠ WARNING**

Remove the battery before adjustment, maintenance or cleaning. Failure to do so could result in serious personal injury.

- You may only make adjustments or repairs described in this manual. For other repairs, contact an authorised service centre.
- Consequences of improper maintenance may cause the chain brake and other safety features to not function correctly, thus increasing the potential for serious injury. Keep your chainsaw professionally maintained and safe.
- Sharpening the chain safely is a skilled task. Therefore the manufacturer strongly recomends that a worn or dull chain is replaced with a new one, available from your authorised Ryobi service centre. The part number is available in the product specification table in this manual.
- Follow instructions for lubricating and chain tension checking and adjustment.
- After each use, clean the product with a soft dry cloth.
- Check all nuts, bolts and screws at frequent intervals for security to ensure the product is in safe working condition. Any part that is damaged should be properly repaired or replaced by an authorised service centre.

### REPLACING GUIDE BAR AND SAW CHAIN

*See page 21 - 22.*

1. Make sure to remove the battery. Wear protective gloves.
2. Unscrew the chain tensioner knob by turning it counterclockwise until the sprocket cover comes loose.
3. Remove the sprocket cover. Remove the bar and saw chain from product.
4. To replace the bar with a new one, remove the screw of the chain tension assembly. Mount the chain tension assembly on to the new bar and tighten the screw.
5. Put the new chain in the correct direction onto the bar and make sure that the drive links are aligned in the bar groove.
6. Attach the bar to the chain saw and loop the chain around the drive sprocket.
7. Replace the sprocket cover.
8. Adjust the chain tension. Refer to the "Adjusting the chain tension" section.

**⚠ WARNING**

A dull or improperly sharpened chain can cause excessive motor speed during cutting which may result in severe motor damage.

**⚠ WARNING**

Improper chain sharpening increases the potential of kickback.

**⚠ WARNING**

Failure to replace or repair a damaged chain can cause serious injury.

**⚠ WARNING**

The saw chain is sharp. Always wear protective gloves when performing maintenance to the chain.

### INSPECTING AND CLEANING THE CHAIN BRAKE

*See page 24.*

- Always keep the chain brake mechanism clean by lightly brushing the linkage free from dirt.
- Always test the chain brake performance after cleaning. Refer to "Operation - Checking and Operating Chain Brake" earlier in this manual for additional information.

### MAINTENANCE SCHEDULE

| **Daily check** | |
|---|---|
| Bar lubrication | Before each use |
| Chain tension | Before each use and frequently |
| Chain sharpness | Before each use, visual check |
| For damaged parts | Before each use |
| For loose fasteners | Before each use |
| Chain brake function | Before each use |
| **Inspect and clean** | |
| Bar | Before each use |
| Complete saw | After each use |
| Chain brake | Every 5 hours* |

* Hours of operation

## SYMBOLS ON THE PRODUCT


Safety alert


Read and understand all instructions before operating the product, follow all warnings and safety instructions.


Wear eye, ear and head protection.


Wear non-slip safety footwear when using the product.


Wear non-slip, heavy duty gloves.


Beware of chain saw kickback and avoid contact with bar tip.


Do not expose to rain or damp condition.


Hold and operate the saw properly with both hands.


Do not operate the saw using only one hand.


Conforms to all regulatory standards in the country in the EU where the product is purchased.


EurAsian Conformity Mark



Ukrainian mark of conformity


Waste electrical products should not be disposed of with household waste. Please recycle where facilities exist. Check with your local authority or retailer for recycling advice.



The guaranteed sound power level is 96 dB


Bar and chain lubricant



Minimum lubricant level


Lock


Unlock


Set the chain brake to the RUN position.


Rotate to adjust chain tension
+ = Tighten the chain
- = Loosen the chain


Set the chain brake to the BRAKE position.


Moving direction of the chain.
(Marked under the sprocket cover)

$V_0$ : 10 m/s — No-load chain speed is 10 m/s

L max: 300mm — Maximum guide bar length is 300 mm

## SYMBOLS IN THIS MANUAL


Parts or accessories sold separately


Note


Warning


Wear eye and face protection.


Wear upper body protection.


Wear leg protection.


Stop the product.

The following signal words and meanings are intended to explain the levels of risk associated with this product.

⚠ **DANGER**
Indicates an imminently hazardous situation, which, if not avoided, will result in death or serious injury.

⚠ **WARNING**
Indicates a potentially hazardous situation, which, if not avoided, could result in death or serious injury.

⚠ **CAUTION**
Indicates a potentially hazardous situation, which, if not avoided, may result in minor or moderate injury.

**CAUTION**
Without safety alert symbol
Indicates a situation that may result in property damage.

RCS18X3050

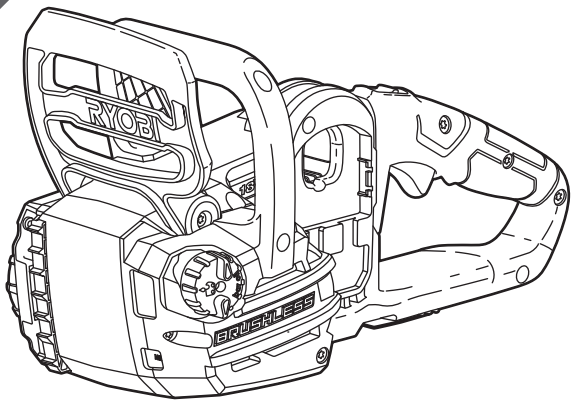


x 1

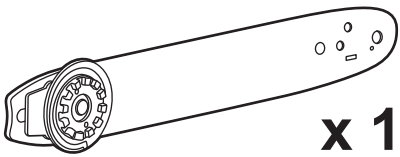

x 1



x 1

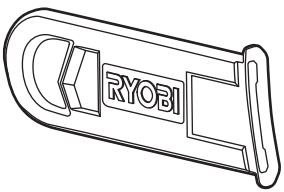


x 1

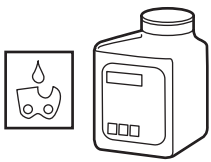

x 1



x 1

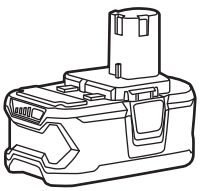

x 1

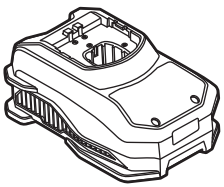

x 1

OCS1830

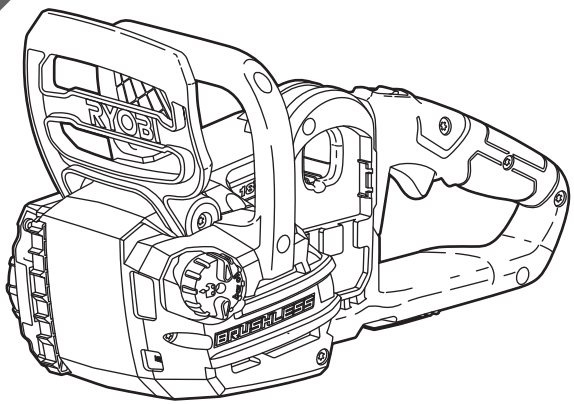


x 1

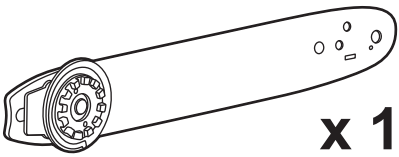

x 1

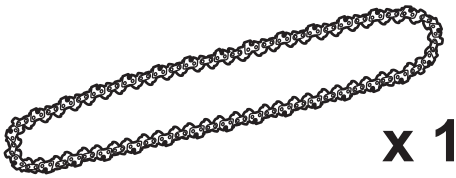

x 1

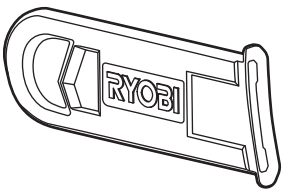


x 1

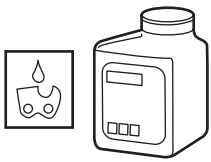

x 1



x 1

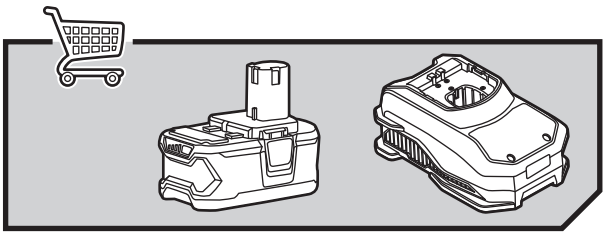

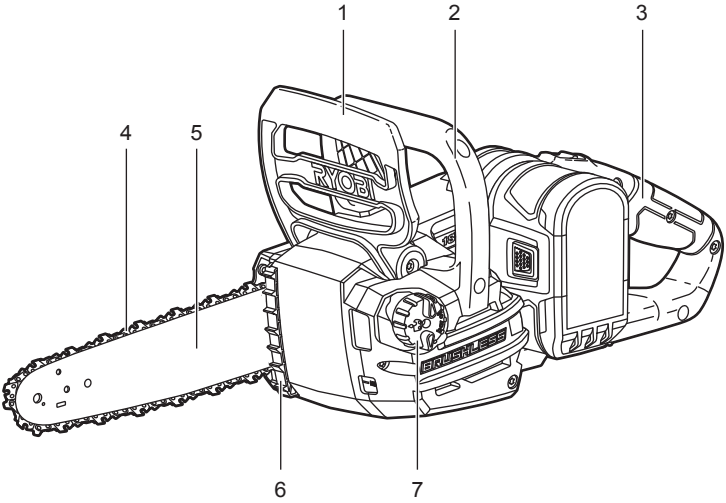
1
2
3
4
5
6
7
RYOBI
BRUSHLESS

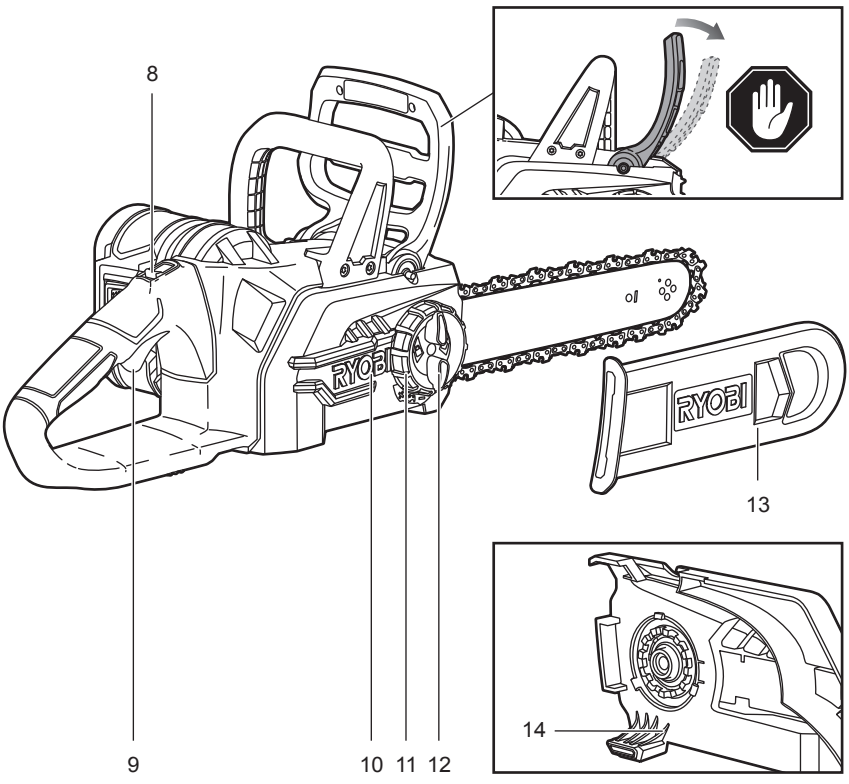
8
9
10
11
12
13
14
RYOBI
RYOBI

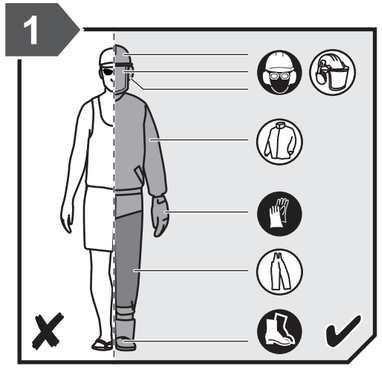

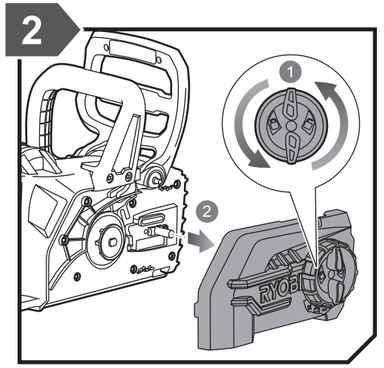
1
2
RYOBI

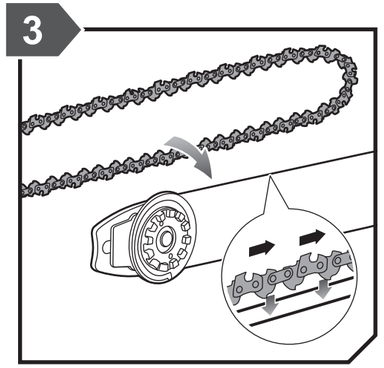

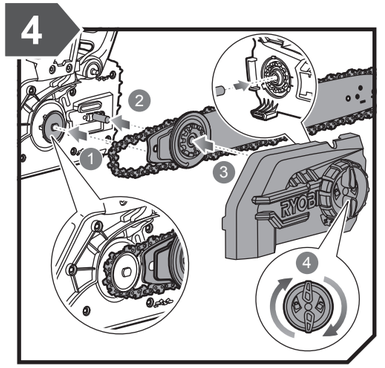
1
2
3
4
RYOBI

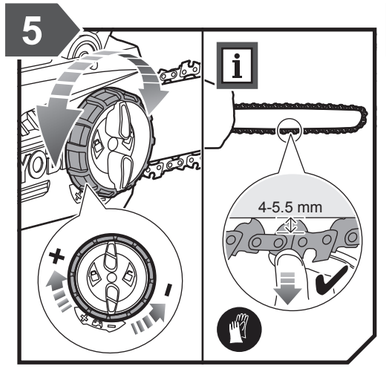
4-5.5 mm

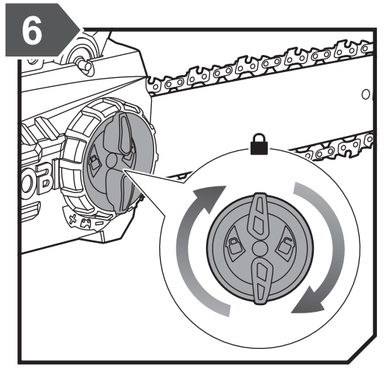

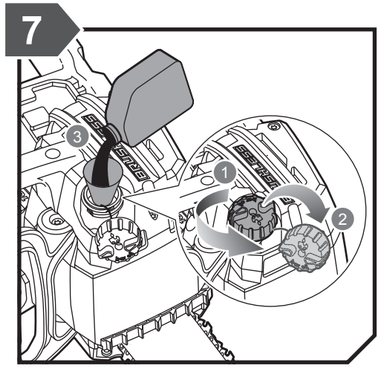
1
2
3

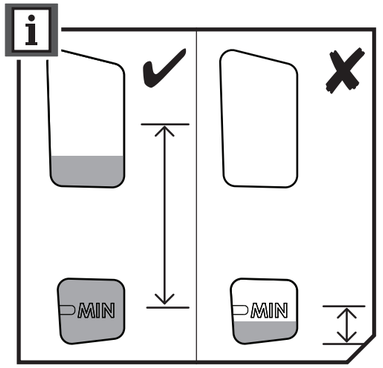
MIN
MIN

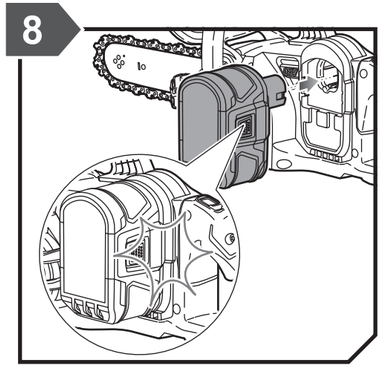

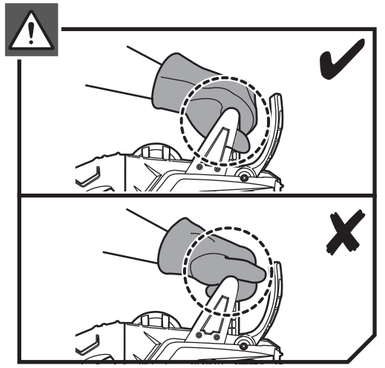

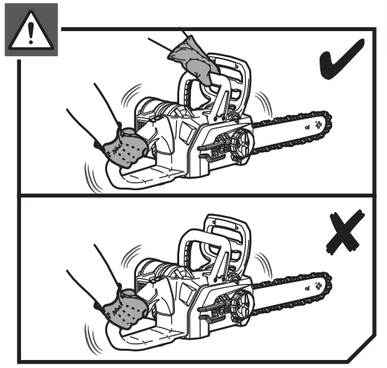

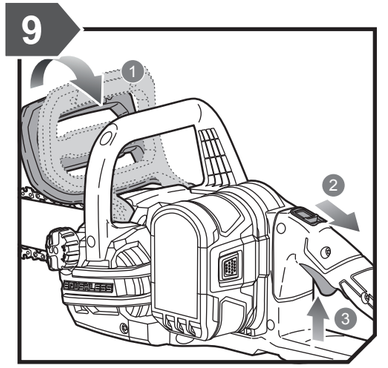
1
2
3

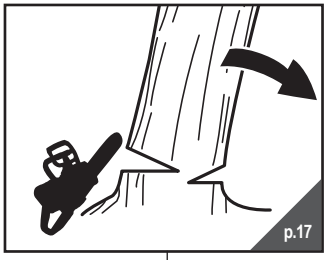
p.17

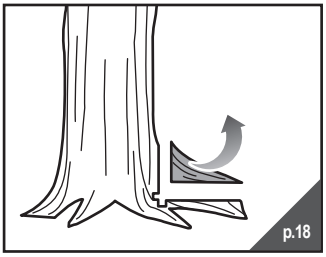
p.18

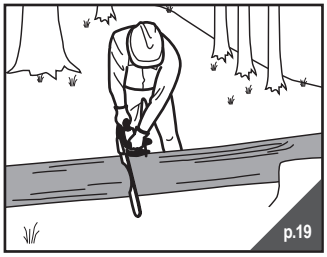
p.19

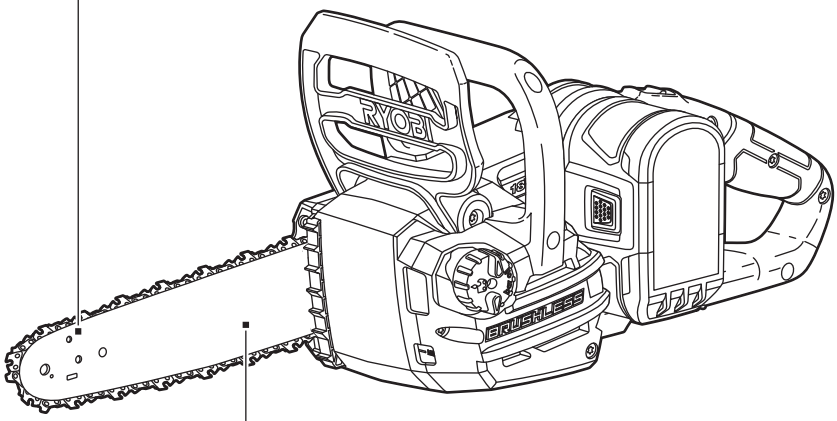
RYOBI
BRUSHLESS

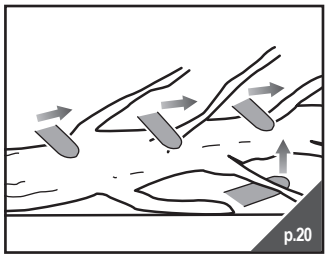
p.20

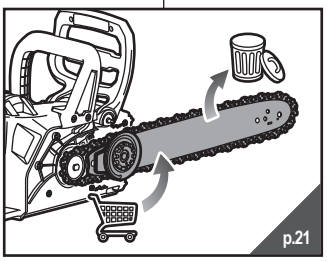
p.21

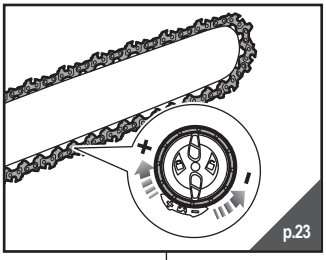
p.23

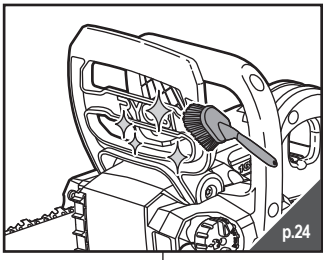
p.24

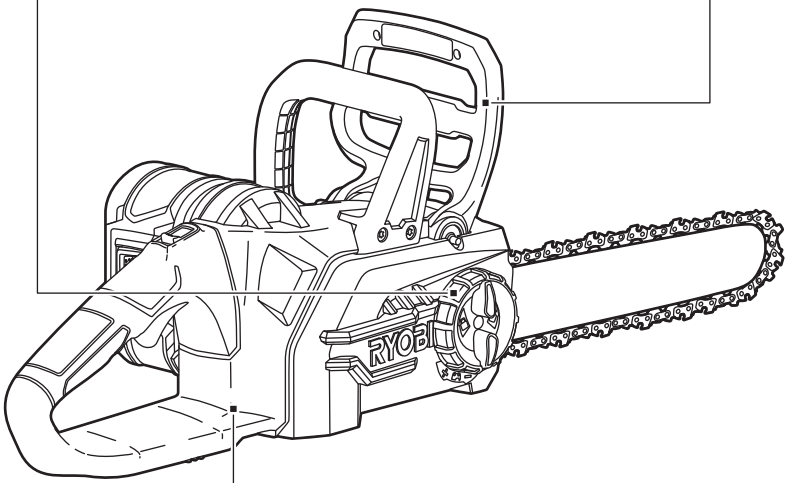
RYOBI

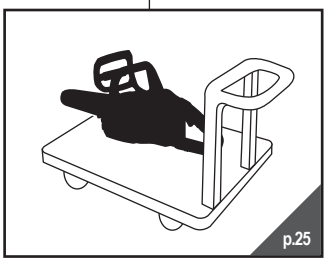
p.25

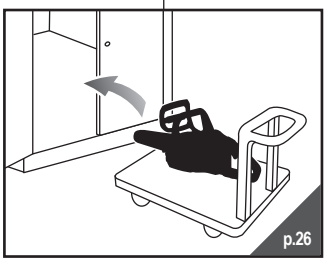
p.26

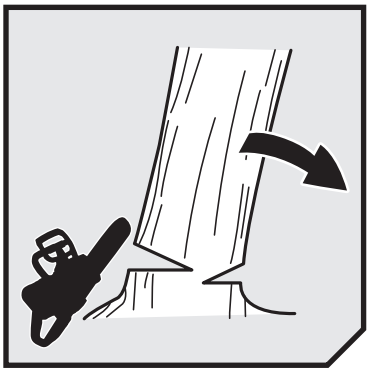

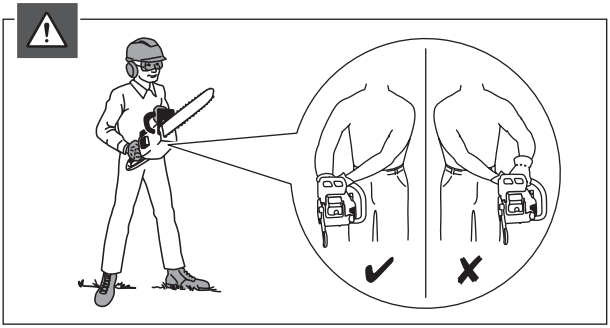

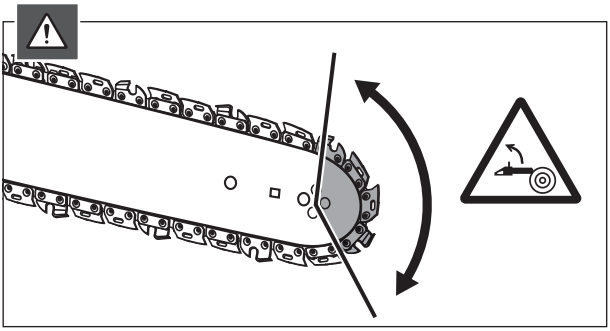

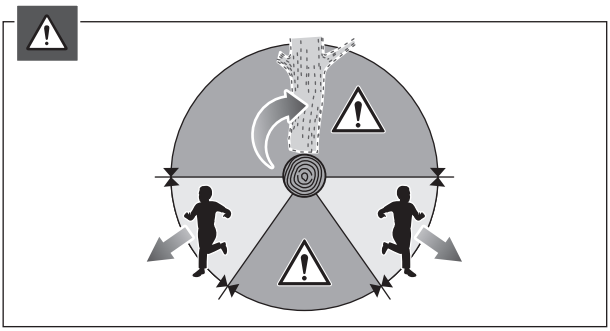

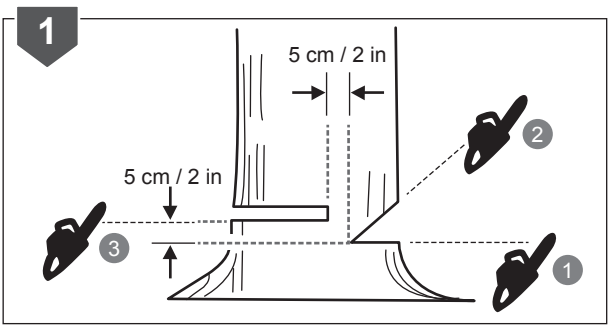
1
5 cm / 2 in
5 cm / 2 in
2
3
1

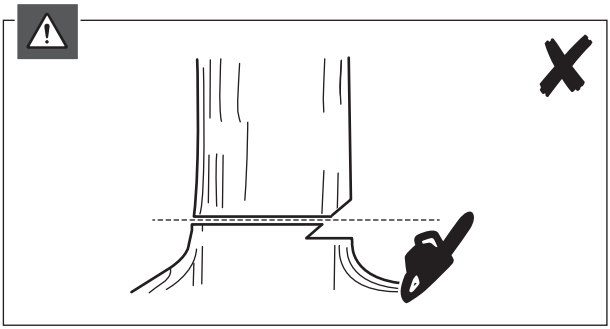

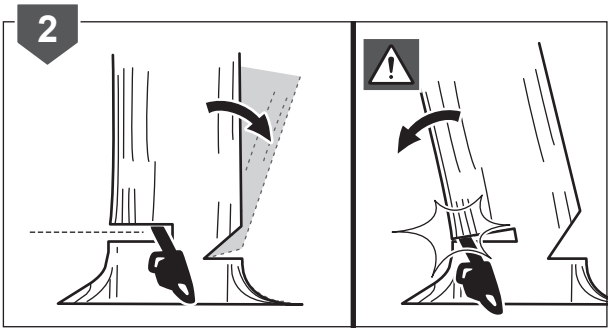
2

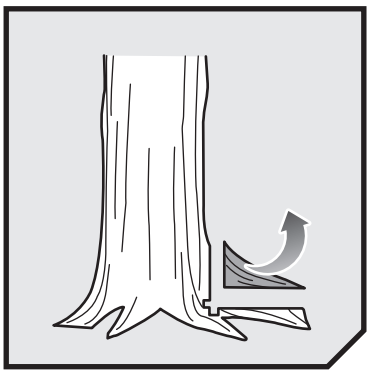

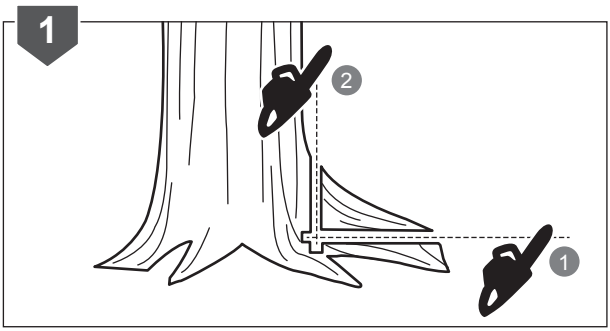
1
2
1

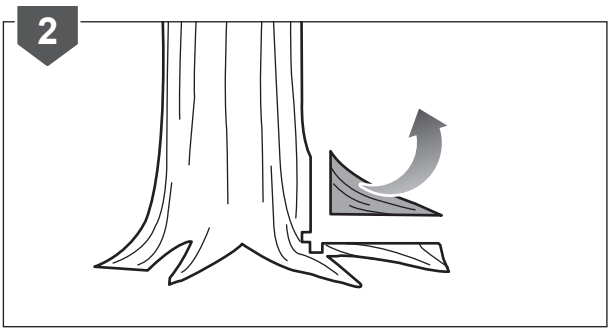
2

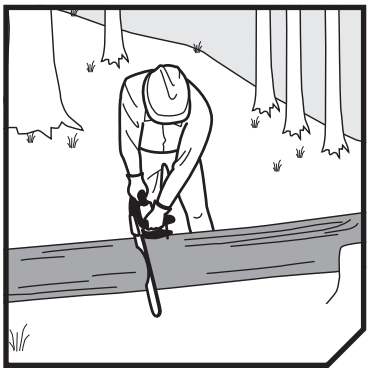

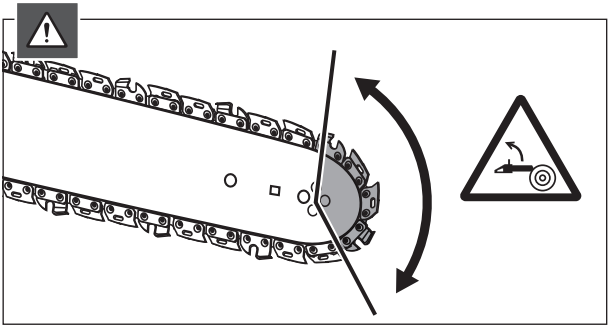

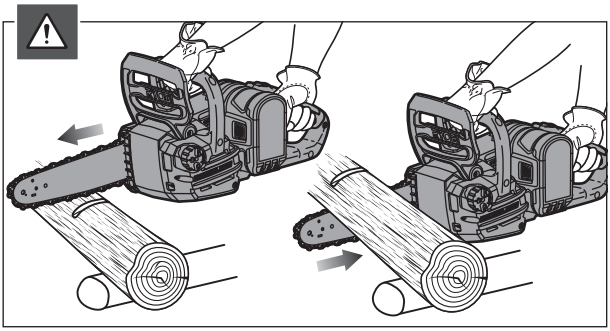

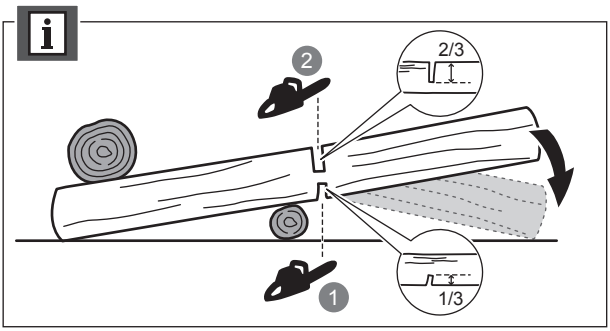
2
2/3
1
1/3

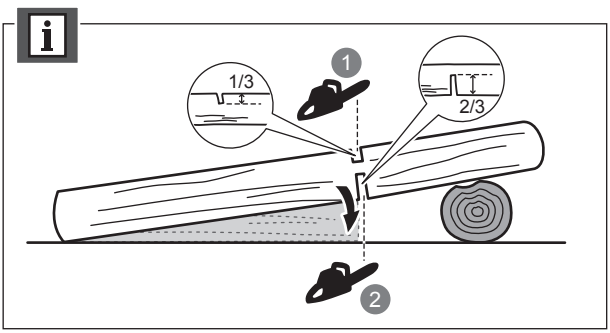
1
1/3
2/3
2

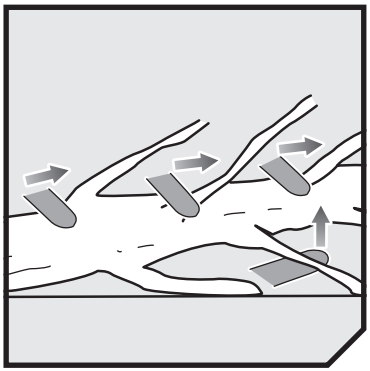

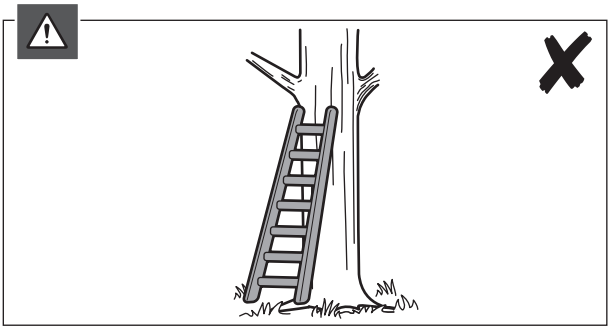

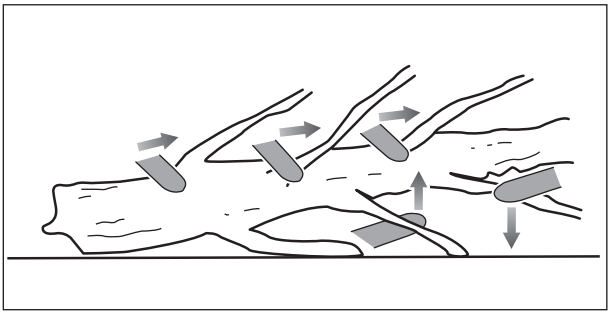

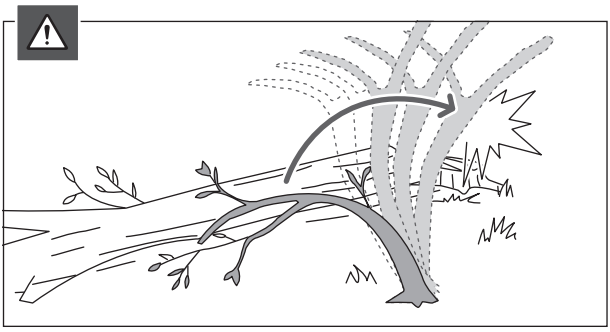

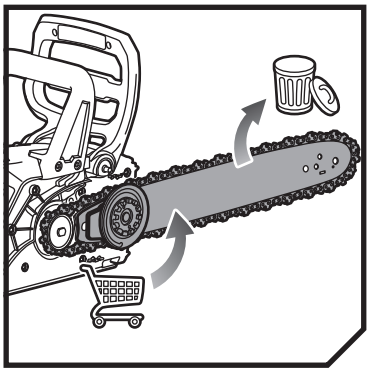

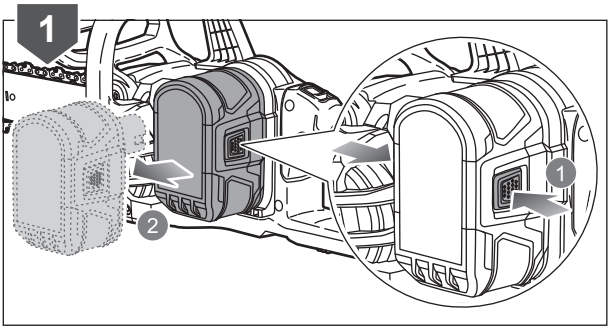
1
2
1

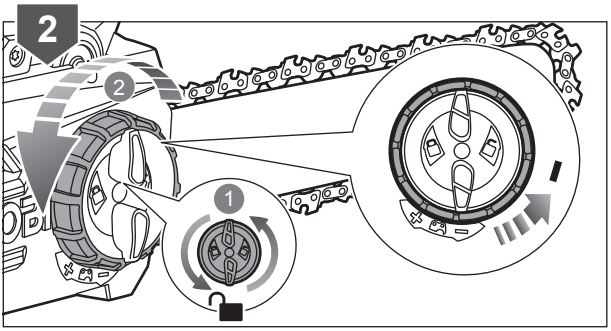
2
2
1

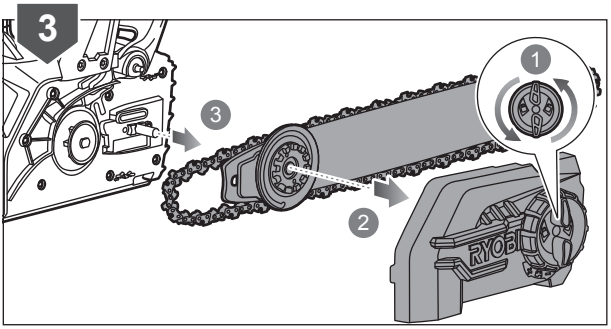
3
1
3
2
RYOBI

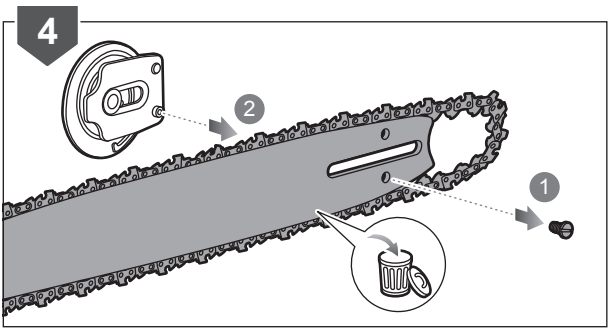
4
2
1

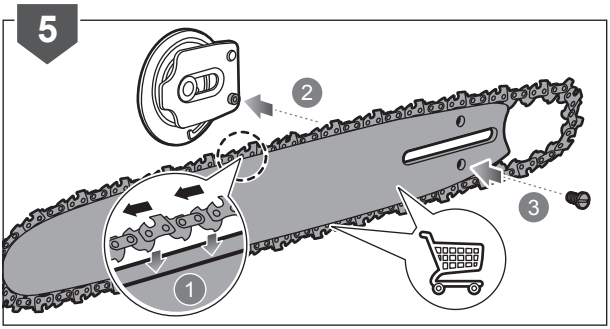
5
1
2
3

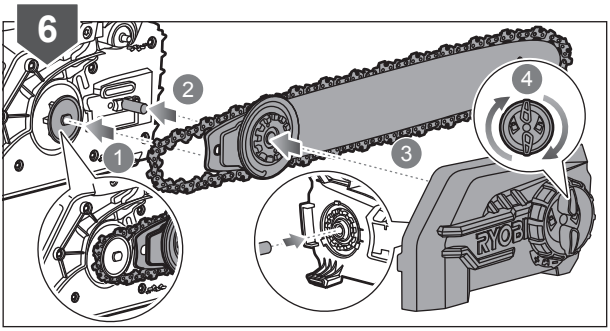
6
1
2
3
4
RYOBI

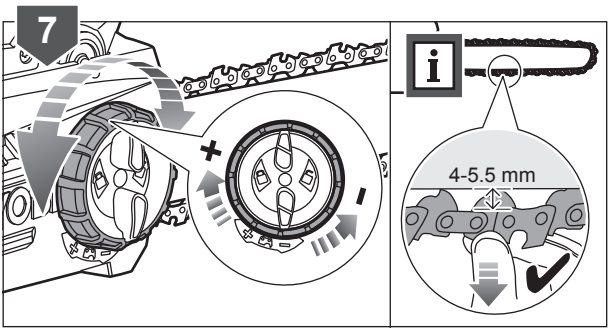
7
+
-
4-5.5 mm

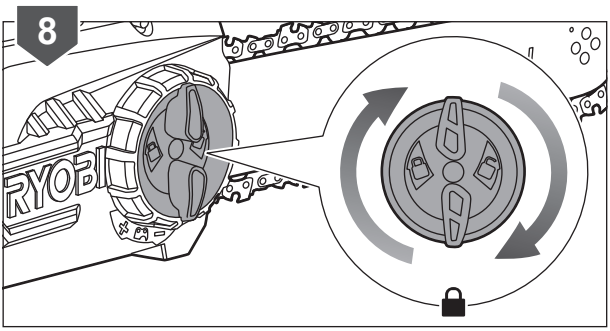
8
RYOBI

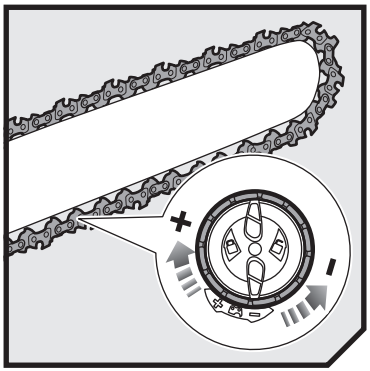

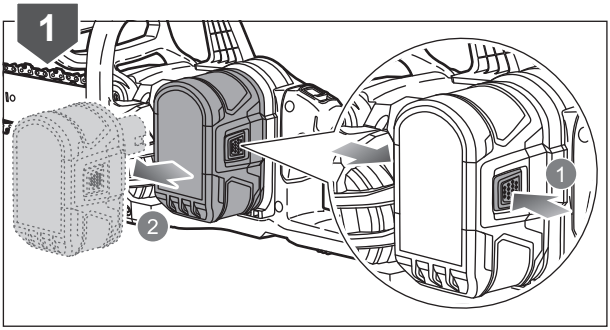
1
2
1

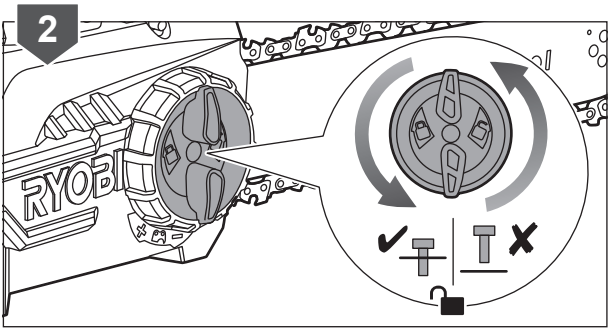
2
RYOBI

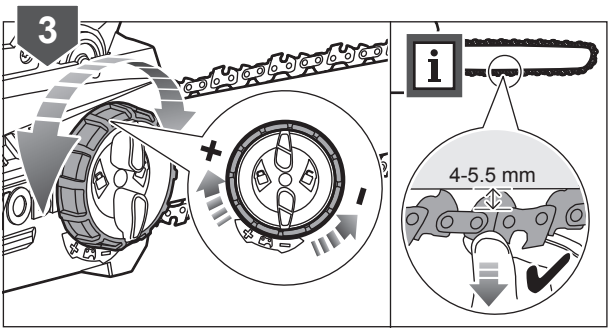
3
4-5.5 mm

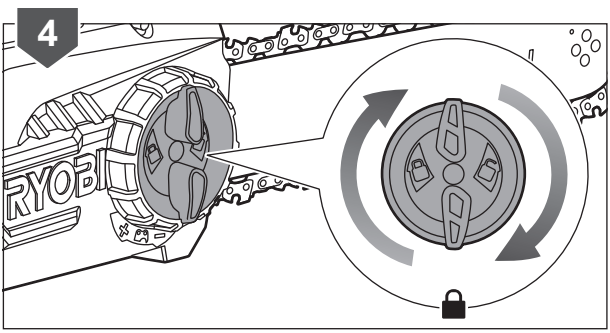
4
RYOBI

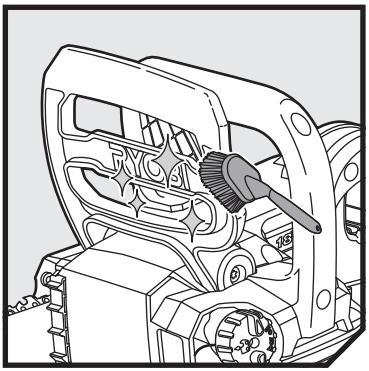

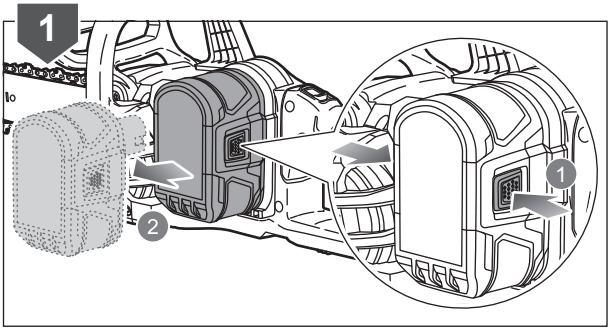
1
1
2

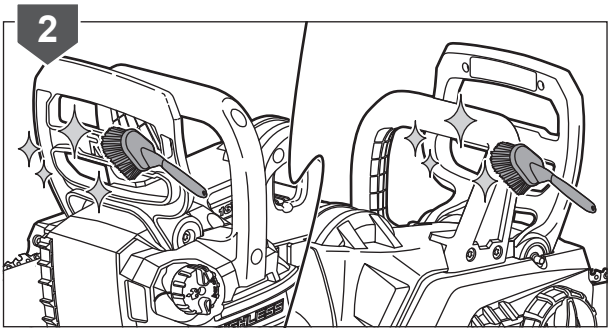
2

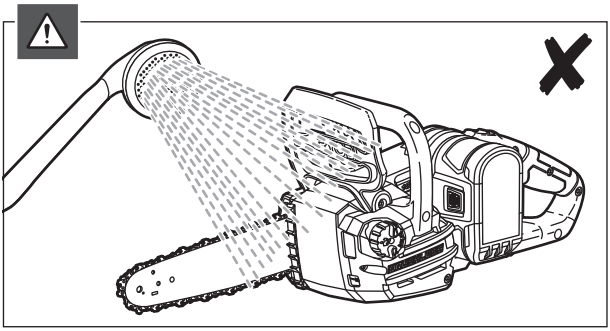

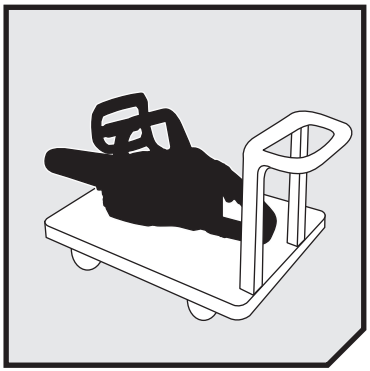

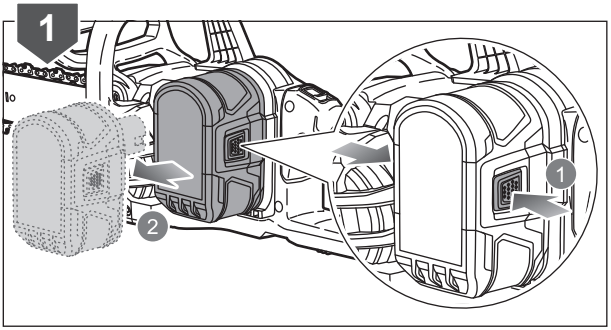
1
2
1

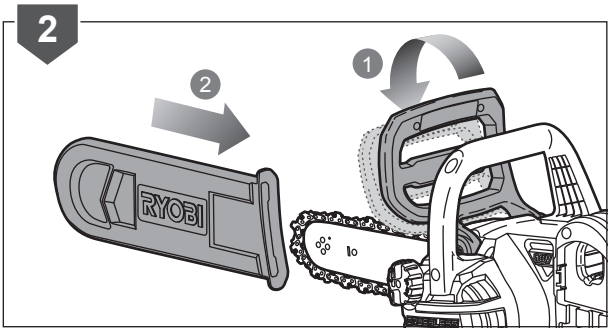
2
1
RYOBI

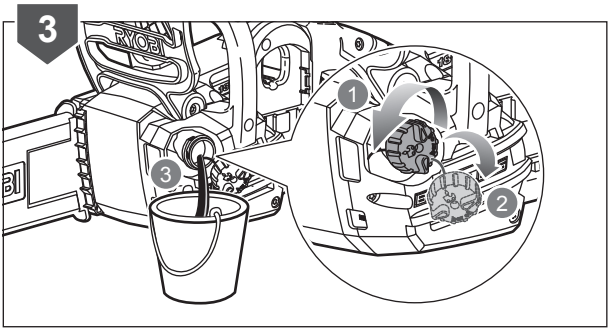
3
RYOBI
1
3
2

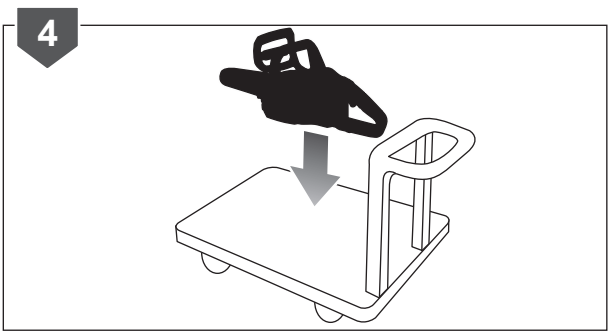
4

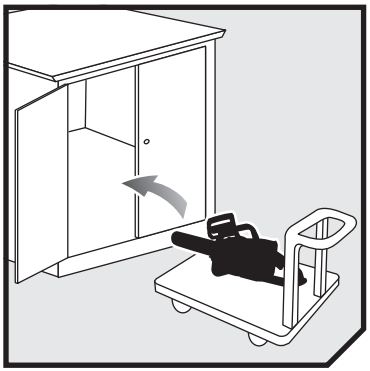

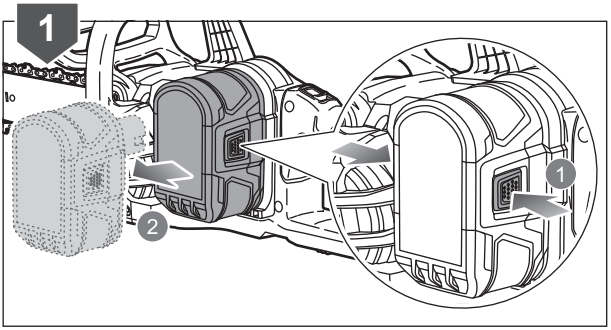


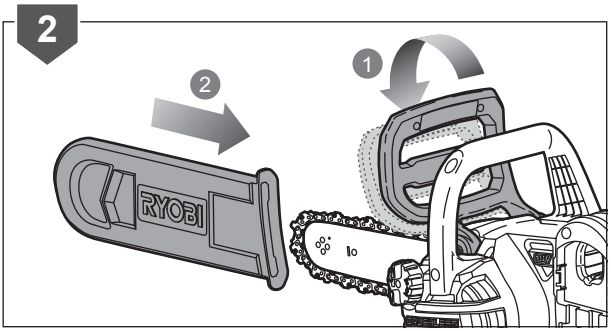


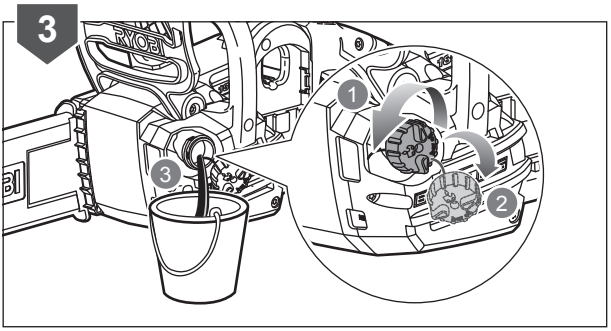


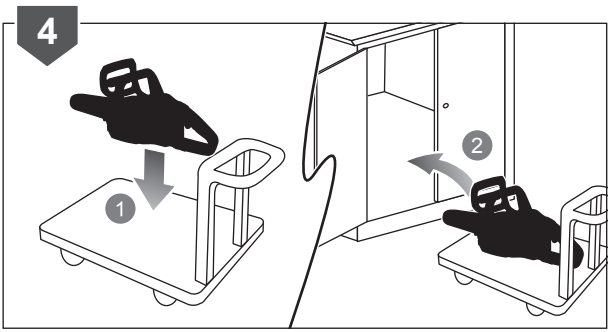


20190122v2

## PRODUCT SPECIFICATIONS

| | |
|---|---|
| Cordless Chainsaw | |
| Model | RCS18X3050/OCS1830 |
| Rated voltage | 18 Volts |
| No-load speed | 10 m/s |
| Guide bar length | 300 mm |
| Usable cutting length | 250 mm (10”) |
| Chain pitch | 9.525 mm (0.375”) |
| Drive links | 45 |
| Drive sprocket | 6 teeth x 0.375” |
| Chain oil tank capacity | 210 ml |
| Weight (without battery pack, with guide bar, chain and empty tank) | 3.2 kg |
| Vibration level (in accordance with EN 60745-1 & EN 60745-2-13) | |
| Front handle | 4.0 $m/s^2$ |
| Rear handle | 6.6 $m/s^2$ |
| Uncertainty of measurement | 1.5 $m/s^2$ |
| Noise emission level (in accordance with EN 60745-1 & EN 60745-2-13) | |
| A-weighted sound pressure level at operator’s position | 83.1 dB(A) |
| Uncertainty of measurement | 2.5 dB |
| A-weighted sound power level | 94.1 dB(A) |
| Uncertainty of measurement | 2.5 dB |

## BATTERY AND CHARGER

| | | |
|---|---|---|
| Model | RCS18X3050 | OCS1830 |
| Battery pack | RB18L50 | Not included |
| Weight | - | - |
| Charger | BCL14181H | Not included |
| Compatible battery packs | RB18L13, RB18L15, RB18L20, RB18L25, RB18L26, RB18L40, RB18L50 | |
| Compatible Charger | BCL14181H, BCL14183H | |

## REPLACEMENT PART (BAR AND CHAIN)

| | | | |
|---|---|---|---|
| Manufacturer | Ryobi | Oregon | Tri-link |
| Bar | RAC226 | 591057 | M1431245-1041HL |
| Chain | RAC227 | 90PX045XTT | CL14345PB |

Chain must be fitted with bar from the same manufacturer according to above combinations.

## VIBRATION LEVEL

The declared vibration value has been measured with a standard test method and may be used to compare one tool with another.

The declared vibration value may be used in a preliminary assessment of exposure.

The vibration emission during actual use of power tool can differ from the declared total value depending on the ways in which the tool is used.

Identify safety measures to protect yourself based on an estimation of exposure in the actual conditions of use, taking account of all parts of the operating cycle such as the times when the tool is switched off and when it is running idle in addition to the trigger time.

## RYOBI® WARRANTY APPLICATION CONDITIONS

In addition to any statutory rights resulting from the purchase, this product is covered by a guarantee as stated below.

1. The warranty period is 24 months for consumers and commences on the date when the product was purchased. This date has to be documented by an invoice or other proof of purchase. The product is designed and dedicated to consumer and private use only. So there is no warranty provided in case of professional or commercial use.
2. There is a possibility to extend for a part of the range of garden tools (AC/DC) the warranty period over the period described above using the registration on the www.ryobitools.eu website. The eligibility of the tools for extension of the warranty period is clearly displayed in stores and / or on packaging / and contained within the product documentation. The end user needs to register his/her newly-acquired tools online within 30 days from the date of purchase. The end user may register for the extended warranty in his country of residence if listed on the online registration form where this option is valid. Furthermore, end users must give their consent to the storage of the data that are required to be entered online, and they have to accept the terms and conditions. The registration confirmation receipt, which is sent out by e-mail, and the original invoice showing the date of purchase will serve as proof of the extended warranty.
3. The warranty covers all defects of the product during the warranty period due to defaults in workmanship or material at the purchase date. The warranty is limited to repair and/or replacement and does not include any other obligations including but not limited to incidental or consequential damages. The warranty is not valid if the product has been misused, used contrary to the instruction manual, or being incorrectly connected. This warranty does not apply to:
   - any damage to the product that is the result of improper maintenance
   - any product that has been altered or modified
   - any product where original identification (trade mark, serial number) markings have been defaced, altered or removed
   - any damage caused by non-observance of the instruction manual
   - any non CE product
   - any product that has been attempted to be repaired by a non-qualified professional or without prior authorization by Techtronic Industries
   - any product connected to improper power supply (amps, voltage, frequency)
   - any product used with inappropriate fuel mixture (fuel, oil, percentage of oil)
   - any damage caused by external influences (chemical, physical, shocks) or foreign substances
   - normal wear and tear spare parts
   - inappropriate use, overloading of the tool
   - use of non-approved accessories or parts
   - Any periodic adjustments to or maintenance cleaning of carburetors
   - Components (parts and accessories) subject to natural wear and tear, including but not limited to bump knobs, drive belts, clutch, blades of hedge trimmers or lawn mowers, harness, cable throttle, carbon brushes, power cord, tines, felt washers, hitch pins, blower fans, blower and vacuum tubes, vacuum bag and straps, guide bars, saw chains, hoses, connector fittings, spray nozzles, wheels, spray wands, inner reels, outer spools, cutting lines, spark plugs, air filters, gas filters, mulching blades, etc.
4. For servicing, the product must be sent or presented to a RYOBI authorized service station listed for each country in the following list of service station addresses. In some countries your local RYOBI dealer undertakes to send the product to the RYOBI service organisation. When sending a product to a RYOBI service station, the product should be safely packed without any dangerous contents such as petrol, marked with sender's address and accompanied by a short description of the fault.
5. A repair / replacement under this warranty is free of charge. It does not constitute an extension or a new start of the warranty period. Exchanged parts or tools become our property. In some countries delivery charges or postage will have to be paid by the sender. Your statutory rights arising from the purchase of the tool remain unaffected
6. This warranty is valid in the European Community, Switzerland, Iceland, Norway, Liechtenstein, Turkey and Russia. Outside these areas, please contact your authorized RYOBI dealer to determine if another warranty applies.

## AUTHORISED SERVICE CENTRES

**ACD PLANT LTD**
145 Southbank Road
Coundon
Coventry, West Midlands
CV6 1FG
Phone: 02476 594348
Email: danmcgunigle@acdplant.co.uk
Web: www.acdplant.co.uk

**CBS Power Tools Limited**
Unit 4, V P Square
Storeys Bar Rd, Fengate
Peterborough, Cambridgeshire
PE1 5YS
Phone: 01733 343031
Email: steve@cbspowertools.co.uk
Web: www.cbspowertools.com

**C D Powertools**
76 Old Road
Churwell Morley, Leeds
LS27 7TH
Phone: 0113 2718494
Email: info@cdpowertools.co.uk
Web : www.cdpowertools.co.uk

**C J Sinclair Limited**
44 Victoria Road
St Peters
Broadstairs, Kent
CT10 2UG
Phone: 01843 869400
Email: repairs@cjsinclairltd.co.uk
Web: www.cjsinclairltd.co.uk

**Powertech Ind Ltd**
Unit 2C, Ellison Road
Norwood Ind, Killamarsh
Sheffield, South Yorkshire
S21 2JG
Phone: 01142 474080
Email: stores@powertech-industrial.co.uk
Web: www.powertech-industrial.co.uk

**RYCKO Technical Services LTD**
104 Green Lane
St Albans, Herts
AL3 6EX
Phone: 08458 678790
Email: info@ryckotechnical.com
Web: www.ryckotechnical.com

**ToolTech Industrial Equipment**
227 E Dunhill Road, Macosquin
Coleraine, Co Londonderry
BT514LQ
Phone: 028 70359493
Email: john@tooltech.org.uk

For an updated list of authorised service centres, visit http://uk.ryobitools.eu/header/service-and-support/service-agents.

## DECLARATION OF CONFORMITY

Techtronic Industries GmbH
Max-Eyth-Strasse 10, 71364 Winnenden, Germany

*Herewith we declare that the product*

Cordless Chainsaw
Brand: RYOBI
Model number: RCS18X3050/OCS1830
Serial number range: 46211501000001 - 46211501999999

*is in conformity with the following European Directives and harmonised standards*

2006/42/EC, 2014/30/EU, 2000/14/EC, 2005/88/EC, 2011/65/EU, EN 60745-1:2009+A11:2010, EN 60745-2-13:2009+A1:2010, EN ISO 3744:2010, EN 55014-1:2006+A1:2009+A2:2011, EN 55014-2:2015, EN 50581:2012

Measured sound power level 93.5 dB(A)
Guaranteed sound power level 96 dB(A)
Conformity assessment method to Annex V Directive 2000/14/EC amended by 2005/88/EC

Notified body, 0197 TÜV Rheinland LGA Products GmbH; Tillystraße 2 D - 90431 Nürnberg, Germany has carried out EC type approval, and the certificate number is : BM 50376488 0001/BM 50367223 0001



CE

Andrew John Eyre (BEng, CEng, MIET)
Vice President, Regulatory & Safety
Winnenden, May 10, 2017

Authorised to compile the technical file:
Alexander Krug, Managing Director
Techtronic Industries GmbH
Max-Eyth-Straße 10, 71364 Winnenden, Germany

**Techtronic Industries GmbH**
Max-Eyth-Straße 10,
71364 Winnenden, Germany

960994069-02