RSH2455

ELECTRIC QUIET SHREDDER

ORIGINAL INSTRUCTIONS

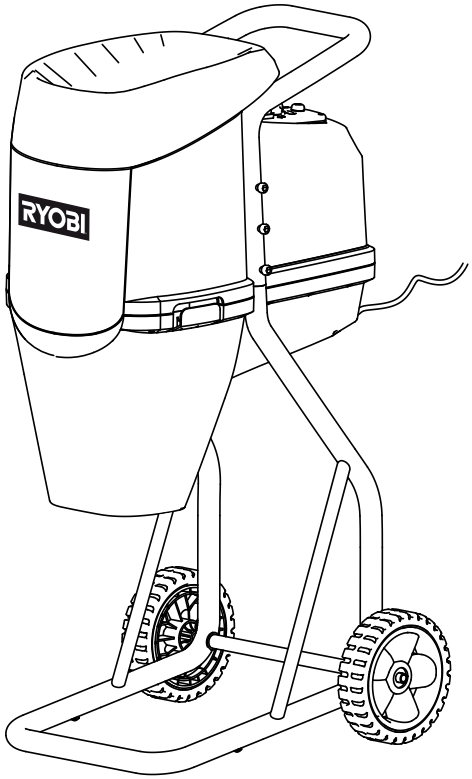

Important!

It is essential that you read the instructions in this manual before mounting and operating this machine.

Subject to technical modifications.

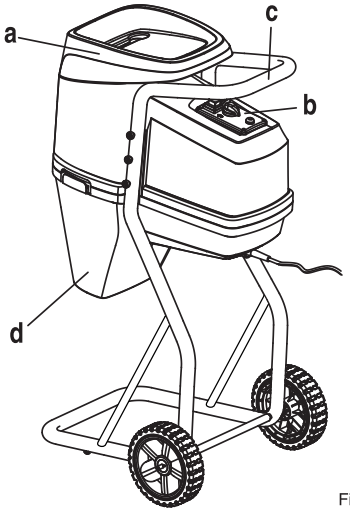

Fig. 1

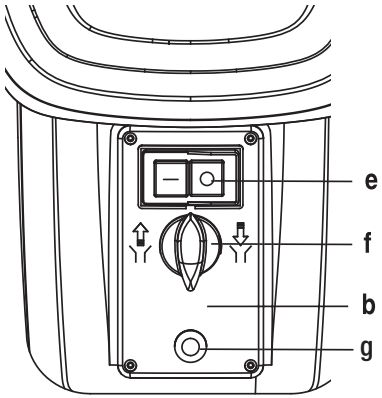

Fig. 2

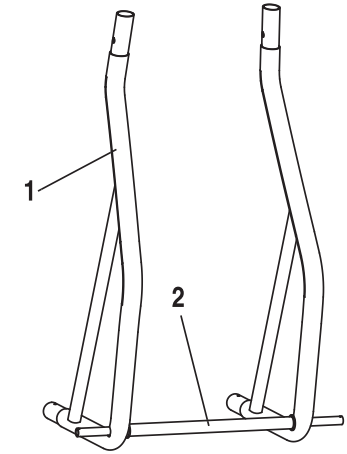

Fig. 3

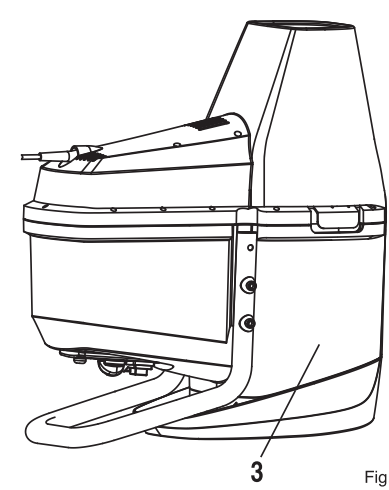

Fig. 4

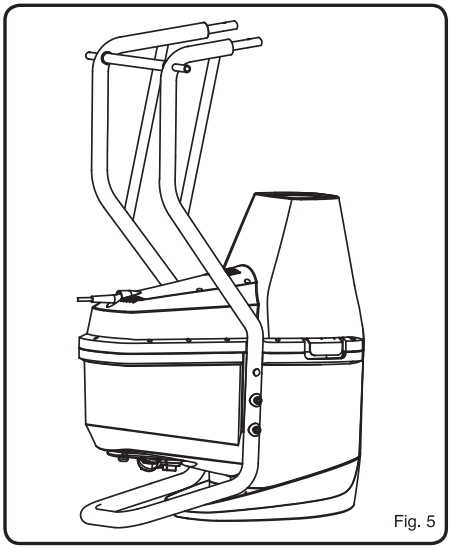

Fig. 5

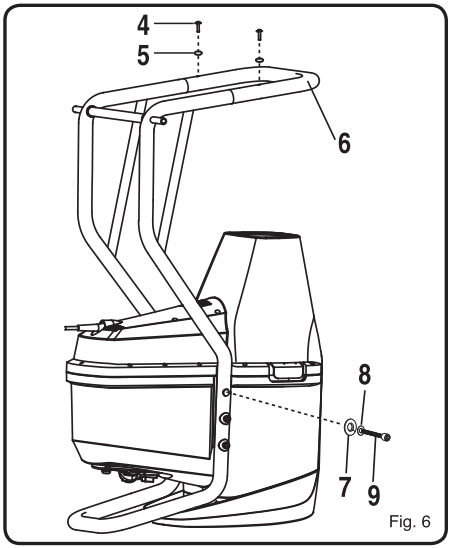

Fig. 6

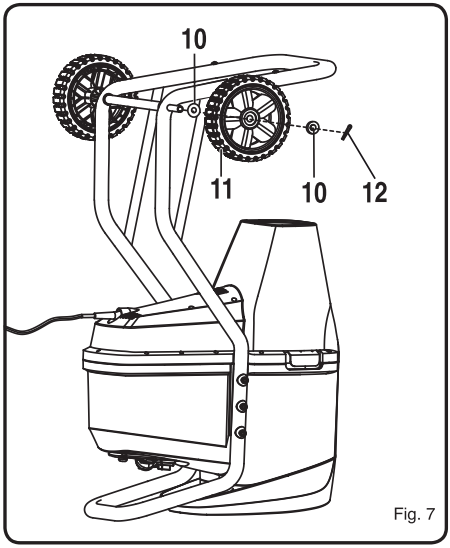

Fig. 7

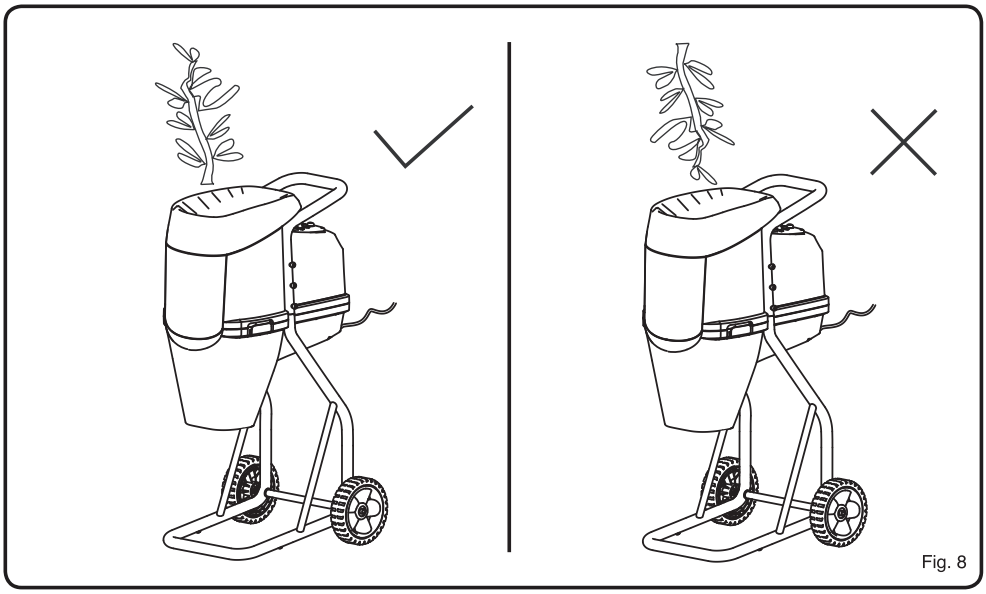

Fig. 8

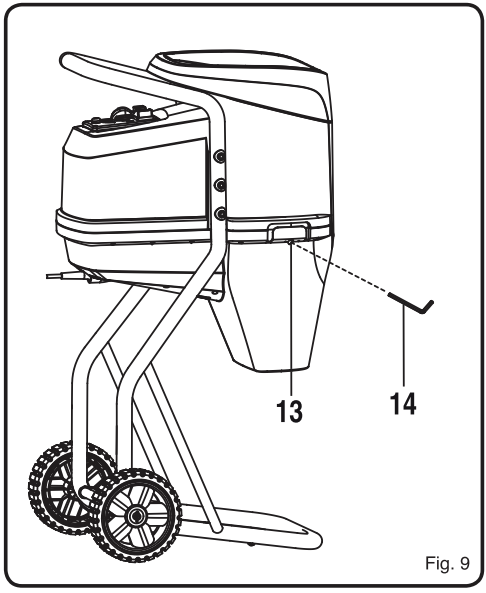

Fig. 9

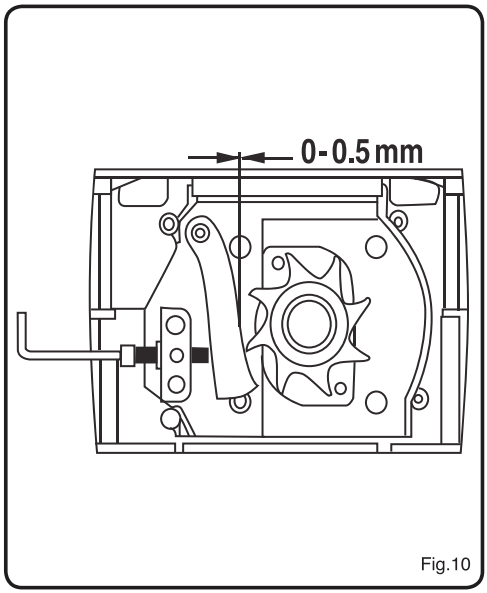

Fig.10

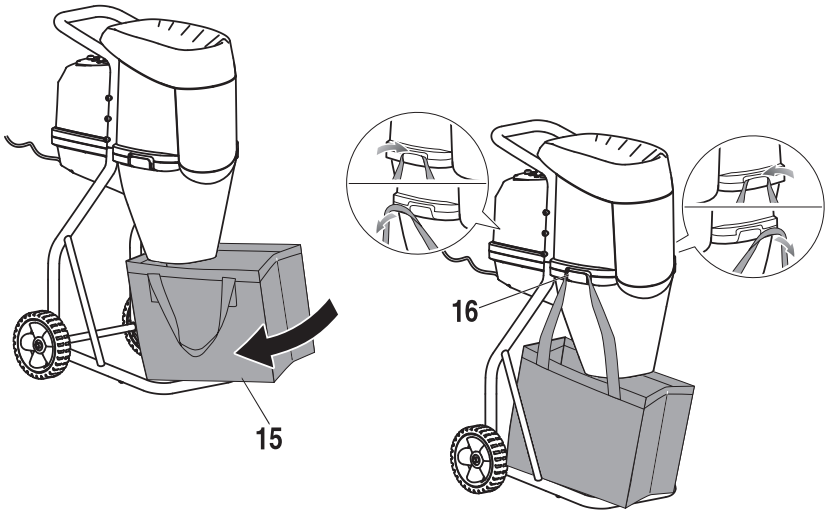

Fig.11

English (Original Instructions)

Your Shredder has been engineered and manufactured to Ryobi's high standard for dependability, ease of operation, and operator safety. When properly cared for, it will give you years of rugged, trouble-free performance. Thank you for buying a Ryobi product.

INTENDED USE

The product is designed for reducing organic garden waste materials such as branches, twigs and foliage to small pieces and is for use outdoors in a stationary position by an operator standing on the ground. This product is not intended for non-organic material, metal or material which exceeds its maximum cutting capacity of 40mm diameter.

WARNING:
To reduce the risk of injury, the user must read and understand the operator's manual before using this product.

IMPORTANT

READ CAREFULLY BEFORE USE. KEEP FOR FUTURE REFERENCE.

GENERAL SAFETY RULES

WARNING
The appliance is not intended for use by children or persons with reduced physical, mental or sensory capabilities. Young children should be supervised at all times by someone other than the operator to ensure that they do not play near or with the appliance.

WARNING
When using this garden shredder basic safety precautions, including the following, should be followed to reduce the risk of fire, electric shock and personal injury. Read all of these safety instructions carefully before operating this garden shredder. Make sure that you are familiar with the controls and the proper and safe use of the garden shredder.

TRAINING

- Become familiar with this user guide before attempting to operate this shredder.
- Never allow children or people unfamiliar with these instructions to use the garden shredder. Local regulations may restrict the age of the operator.
- The operator or user of this garden shredder is responsible for accidents or hazards occurring to other people or their property.

PREPARATION

- Do not allow children to operate this equipment;
- Do not operate this equipment in the vicinity of bystanders;
- Wear ear protection and safety glasses at all times while operating the machine;
- Avoid wearing clothing that is loose fitting or that has hanging cords or ties;
- Only operate the machine in open space (e.g. not close to a wall or a fixed object) and on a firm, level surface;
- Do not operate the machine on a paved or gravel surface where ejected material could cause injury;
- Before starting the machine, check that all screws, nuts, bolts, and other fasteners are properly secured and that guards and screens are in place. Return to an authorised service centre to replace damaged or unreadable labels.

ELECTRICAL SAFETY

- Read these safety instructions thoroughly before connecting this product to the mains supply.
- Before switching on, make sure that the voltage of your electricity supply is the same as that indicated on the rating plate. This product is designed to operate on 230-240V~AC 50Hz. The manufacturer recommends you connect to a power socket protected by an RCD with a trip of 30mA.
- Connecting it to any other power source may cause damage.
- If the supply cord is damaged, it must be replaced by the manufacturer, its service agent or similarly qualified persons in order to avoid a hazard.
- Only use a weather proof extension cable. Before every use, examine the extension cord for damage. Always uncoil the extension cord during use because coiled cords can overheat. Damaged extension cords should not be repaired, they should be replaced with an equivalent type.

SPECIFIC SHREDDER SAFETY RULES

OPERATION

- Before starting the machine, look into the feeding chamber to make certain that it is empty.
- Keep your face and body away from the feed intake opening.
- Do not allow hands or any other part of the body or clothing inside the feeding chamber, discharge chute, or near any moving part.
- Keep proper balance and footing all times. Do not

overreach. Never stand at a higher level than the base of the machine when feeding material into it.

- Always stand clear of the discharge zone when operating this machine.
- When feeding material into the machine be extremely careful that pieces of metal, rocks, bottles, cans or other foreign objects are not included.
- If the cutting mechanism strikes any foreign objects or if the machine should start making any unusual noise or vibration, switch the machine off and allow the cutters to completely stop. Disconnect the product from its power supply, and take the following steps:
  - inspect for damage;
  - check for and tighten any loose parts;
  - have any damaged parts replaced or repaired with genuine Ryobi spare parts.
- Do not allow processed material to build up in the discharge chute as this may prevent proper discharge or blockage and can result in kickback of material through the feed intake opening.
- If the machine becomes clogged, switch the machine off and allow the cutters to completely stop. Disconnect the product from its power supply before clearing debris.
- Keep all guards and deflectors in place and in good working condition.
- If dust is created by the shredding process, wear a suitable dust mask to prevent respiratory injury.
- Do not move or transport the machine while the motor is running.
- Switch off the machine and disconnect from the power supply whenever you leave work area.
- Do not tilt the machine while the motor is running.

WARNING!
Injuries may be caused, or aggravated, by prolonged use of a tool. When using any tool for prolonged periods, ensure you take regular breaks.

RESIDUAL RISK

Even when the product is used as prescribed, it is still impossible to completely eliminate certain residual risk factors. The following hazards may arise in use and the operator should pay special attention to avoid the following:

- Exposure to noise can cause hearing injury. Wear ear protection and limit exposure.
- Inhalation of dust and particles. Wear dust mask / filter when necessary.
- Contact with the cutting mechanism. Keep unprotected body parts away from the cutting mechanism at all times.

KNOW YOUR PRODUCT

a. Feed Hopper
b. Switch Panel
c. Handle
d. Discharge Chute
e. On / Off switch
f. Forward / Reverse Selection Knob
g. Over-load Protector
1. Supporting Leg
2. Axle
3. Main Body
4. Round Screw M5*8
5. Lock Washer
6. End Frame
7. Saddle Washer 8
8. Spring Washer 8
9. Hex Socket Screw M8*55
10. Flat Washer
11. Wheel
12. Hitch Pin
13. Adjusting Screw
14. Allen Key
15. Collection bag
16. Hook

English (Original Instructions)

WARNING SYMBOLS

The following warning symbols/pictograms are found on the appliance.

SYMBOLS	EXPLANATION
	Read operator's manual
	Remove plug from the mains immediately before maintenance or if cable is damaged or cut.
	Beware of thrown or flying objects. Keep all bystanders, especially children and pets, at least 15 m from the operating area.
	Wear hearing protection. Wear eye protection.
	Beware of rotating blades. Keep hands and feet out of openings while machine is running
	Always wear sturdy gloves when operating the garden shredder.
	Keep hands out of the feed chute.
	Forward - normal running mode
	Reverse - used for clearing blackages
	Shaving plate adjustment
	Waste electrical products should not be disposed of with household waste. Please recycle where facilities exist. Check with your local authority or retailer for recycling advice.
	CE conformity
	GOST-R Conformity
	Guaranteed sound power level is 94 dB.

ASSEMBLY

WARNING!

You may need assistance when lifting the machine out of the box and assembling.

- Insert the axle (2) through the holes in each leg (1). **NOTE:** The legs should be angled outwards (Figure 3) and the pin holes on the legs should face inside.
- Turn the shredder upside down (Figure 4).
- Insert the leg frame onto the motor housing (Figure 5).
- Attach the end frame (6) onto the leg frame.
- Secure the legs with hex screws (9), spring washer (8) and a saddle washer (7) for each leg and secure the end frame with round screws (4) and washers (5) (Figure 6). Tighten all nuts and screws.
- Insert wheels (11) onto the ends of the axle and secure with washers (10) and hitch pins (12) (Figure 7).

WARNING!

Take care when tilting the unit onto its wheels as the unit has an uneven weight distribution when tilted and during wheeled transportation.

WARNING!

To ensure the stability of the shredder, make sure that the cap headed bolts and washers are securely tightened.

OPERATION

Read and understand all of the safety and other instructions in this manual before attempting to use the shredder.

CAUTION!

Do not feed stones, glass, metal objects, bones, plastic or rags into the shredder.

These materials will cause serious damage to the shredder. Do not feed roots covered with soil, as this will damage the blades.

WARNING!

Do not fix a collection bag around the waist of the discharge chute. Fix and position the collection bag as shown in fig 11.

- Position the shredder on a firm, level, stable surface.
- Switch the machine off before attaching or removing the bag.
- Wear ear protection and safety glasses at all times while operating the machine.
- Ensure power On/Off switch is in the OFF position before plugging in the power cord or switching on the mains power.
- Connect to the mains supply. Select forward rotation by turning the forward / reverse selection knob (f) to the right
- To switch on the shredder, first press the power On/ Off switch to ON.
- To switch off simply push the On/Off switch to the OFF position.
- Wearing heavy duty gloves. Carefully feed the material to be shredded into the hopper (a). Material will be automatically pulled through the blades and emerge at the discharge chute (d).
- To prolong the life of the hopper, wood should be fed into the hopper with branches pointing upward. See figure 8.
- If the shredder does not automatically unblock itself, turn the machine off and turn the forward / reverse selection knob to the left. Then turn the shredder on again. This should clear the blockage. Once the blockage is free, turn the shredder off and turn the forward / reverse selection knob to the right (forward rotation) before turning the shredder back on.
- If the machine is overloaded, the circuit breaker will cut off the shredder. Leave it for about 5 minutes, then press the over-load protector (h), followed by the On switch. The shredder should then start.

WARNING!

Do not put your hands into the feeding hopper. The shredder must be used in the upright position only. Do not operate the shredder if it is lying on its side.

CAUTION

Do not operate the knob/ switches in sequence using abrupt motions. Sudden switching may generate current spikes potentially damaging the shredder.

SHREDDING GUIDE

For best results when shredding, follow the guidelines shown in the table below.

MATERIAL	SHREDDING METHOD
Twigs and up to 6mm diameter.	Feed into the feeding hopper at a rate which the shredder will accept without overloading. Use the plunger provided to push the material into the chute if required.

Branches and up to 40mm in diameter.	Clip off all side growth with secateurs before feeding into the feeding hopper with the plunger.
Bedding plants, weeds and shrubby growth.	Knock soil and stones off the roots to avoid damage to the blades.
Freshly cut foliage, hedge, and kitchen waste.(I.e. cabbage leaves, vegetable peelings etc.)	With any material having a high moisture content it is advised to feed in some drier sticks at regular intervals to help push the material trough the cutting assembly and prevent it from clogging.
Dry sticks and twigs	By inserting these at the end of your shredding task, this will help to clean the moisture and plant sap from the inside of the shredder and the cutting assembly.

- Do not allow garden waste to accumulate before shredding as it will begin to compost, become too damp and clog the cutting assembly. Dry material will help most material to clear the ejection chute. Save some dry sticks until last to help clean the blade area.
- Frequently monitor the build up/collection of shredded material.
- The exit of the discharge chute must be clear at all times to prevent blockages.
- When the collection bag is full, turn the garden shredder Off before emptying.

WARNING!
Do not put your hands up inside the shredder's discharge chute to clear away shredded material while the shredder is switched on or connected to the mains supply.

WARNING!
When feeding long woody branches/stems into the shredder be careful of whip and vibrations as they get caught by the cutter. The operator must wear eye protection whenever using the shredder.

WARNING!
The cutting device has a tendency to pull branches/stems into the machine. Do not try to impede entry of the material being cut once feeding has started. If necessary, use the plunger provided to push the waste material down into the feeding chute. Always wear gloves to prevent skin lacerations when feeding material into the shredder.

NOTE: In normal use, do not switch off the garden shredder until all of the shredded material has cleared the cutter assembly. If the garden shredder is switched off too quickly, remaining pieces of material may clog the blade assembly and stall the motor when the shredder is switched back on.

MAINTENANCE

Before cleaning, inspecting or servicing the machine, switch it off and allow the cutters to completely stop, disconnect the electric supply. After some time of shredding the cutting mechanism will become hot. Allow it to adequately cool before touching.

WARNING

The cutter blades are extremely sharp. To avoid injury, exercise extreme caution and care when cleaning or working near the blades or inside the open enclosure. Always wear heavy duty protective gloves.

To ensure the best performance from the garden shredder, it must be kept clean.

- Always clean the garden shredder immediately after use. Wherever possible use a stiff brush inside the feed and discharge chutes and a dry cloth on the outside of the shredder.
- Do not allow material to become dry and hard on any of the garden shredder surfaces, but particularly on the blades. This will directly affect the shredding performance.
- Make sure that the feed hopper and the ejection chute are kept clean and clear of all waste material
- Make sure that all nuts, bolts and screws (except the adjusting screw (13)) are tight and secure.
- Always have any damaged or worn parts repaired, or replaced by qualified personnel at an approved Ryobi service centre.

WARNING

Do not at any time let brake fluids, gasoline, petroleum-based products, penetrating oils, etc., come in contact with plastic parts. Never use brake fluids, gasoline, petroleum-based products, or any solvents to clean tool. Most plastics are susceptible to damage from various types of commercial solvents and may be damaged by their use.

- See fig 11 for details about how to fit the collection bag. Switch the machine off before attaching or removing the bag.

- You may perform maintenance tasks described in this manual, for other repairs or advice seek the assistance of an approved Ryobi service centre.

SHAVING PLATE ADJUSTMENT

- If the shredder fails to shred material, the shaving plate may need adjusting.

  NOTE: Adjusting the shaving plate should only be attempted when deemed totally necessary. Adjusting the shaving plate too often or too far could cause your shredder to cease working.
- Ensure the shredder is turned on and working in normal forward direction. Adjusting the shaving plate while the motor is turned off could lead to serious damage of your shredder.
- Turn the adjusting screw (13) with the allen key (14) very slowly and very slightly in a clockwise direction with the motor running until fine aluminium chips fall out of the discharge chute (Figure 9 -10).

STORAGE AND TRANSPORTATION

- Make sure that the garden shredder has been thoroughly cleaned before storing it in a clean, dry place and secured out of the reach of children.
- When transporting the shredder, make sure it is secured against falling or movement within the vehicle.

TROUBLESHOOTING

PROBLEM	CAUSE	ACTION
Motor does not run.	The overload protection has operated	Wait for the motor to cool, press the reset button. Switch on the machine again.
	Power failure	Check the power supply cable, the plug and the house fuse.
Material to be shredded is not drawn in	The material is jammed in the feeding funnel.	Follow instruction in this manual for clearing obstructions.
	Shaving plate is too far to working.	Follow instruction in this manual for shaving plate adjustment.

TECHNICAL DATA

Type Model No	RSH2455
Voltage	230-240 V ~50 Hz
Power	2400W (S6-40%) 2200W (S1)
Maximum cutting diameter	Max. 40 mm
Idle speed	46 /min^{-1}
Weight	29 kg
Measured sound pressure level	L_{PA}: 80.3 dB(A)
Uncertainty	2.0 dB
Measured sound power level	L_{WA}: 92.0 dB(A)
Uncertainty	2.0 dB

NOTE:

1. The S6(40%) indicates a load profile of 4 minutes load and 6 minutes idle time. For practical application, (i.e. collecting waste and shredding) continuous operation is permitted.

2. The maximum cutting diameter depends on the hardness of the wood.

The noise levels indicated in the manual technical data have been measured in accordance with EN 13683:2003+A2:2011/ AC 2013 Annex F.

GUARANTEE

In addition to any statutory rights resulting from the purchase, this product is covered by a guarantee as stated below.

1. The guarantee period is 24 months for consumers and commences on the date when the product was purchased. This date has to be documented by an invoice or other proof of purchase. The product is designed and dedicated to consumer and private use only. So there is no guarantee provided in case of professional or commercial use.
2. There is, in some cases (i.e. promotion, range of tools), a possibility to extend the warranty period over the period described above using the registration on the www.ryobitools.eu website. The eligibility of the tool is clearly displayed in stores and/or on packaging. The end user needs to register his/her newly-acquired tools online within 8 days the date of purchase. The end user may register for the extended warranty in his country of residence if listed on the online registration form where this option is valid. Furthermore, end users must give their consent to the storage of the data which are required to enter online and they have to accept the terms and conditions. The registration confirmation receipt, which is sent out by e-mail, and the original invoice showing the date of purchase will serve as proof of the extended warranty. Your statutory rights remain unaffected.
3. The guarantee covers all defects of the product during the warranty period due to defaults in workmanship or material at the purchase date. The guarantee is limited to repair and/or replacement and does not include any other obligations including but not limited to incidental or consequential damages. The warranty is not valid if the product has been misused, used contrary to the instruction manual, or being incorrectly connected. This guarantee does not apply to:
   - any damage to the product that is the result of improper maintenance
   - any product that has been altered or modified
   - any product where original identification (trade mark, serial number) markings have been defaced, altered or removed
   - any damage caused by non-observance of the instruction manual
   - any non CE product
   - any product which has been attempted to be repaired by an non-qualified professional or without prior authorization by Techtronic Industries
   - any product connected to improper power supply (amps, voltage, frequency)
   - any product used with inappropriate fuel mixture (fuel, oil, percentage of oil)
   - any damage caused by external influences (chemical, physical, shocks) or foreign substances
   - normal wear and tear of spare parts
   - inappropriate use, overloading of the tool
   - use of non-approved accessories or parts
   - carburettor after 6 months, carburettor adjustments after 6 months
   - components (parts and accessories) subject to natural wear and tear, including but not limited to bump knobs, drive belts, clutch, blades of hedge trimmers or lawn mowers, harness, cable throttle, carbon brushes, power cord, tines, felt washers, hitch pins, blower fans, blower and vacuum tubes, vacuum bag and straps, guide bars, saw chains, hoses, connector fittings, spray nozzles, wheels, spray wands, inner reels, outer spools, cutting lines, spark plugs, air filters, gas filters, mulching blades, etc.
4. For servicing, the product must be sent or presented to an RYOBI authorized service station listed for each country in the following list of service station addresses. In some countries your local RYOBI dealer undertakes to send the product to the RYOBI service organisation. When sending a product to an RYOBI service station, the product should be safely packed without any dangerous contents such as petrol, marked with sender's address and accompanied by a short description of the fault.
5. A repair/replacement under this guarantee is free of charge. It does not constitute an extension or a new start of the guarantee period. Exchanged parts or tools become our property. In some countries delivery charges or postage will have to be paid by the sender.
6. This guarantee is valid in the European Community, Switzerland, Iceland, Norway, Liechtenstein, Turkey and Russia. Outside these areas, please contact your authorized RYOBI dealer to determine if another warranty applies.

AUTHORISED SERVICE CENTRES

RYCKO Technical Services LTD
104 Green Lane Hertfordshire AL3 6EX St Albans
Phone: 08458 678 790
Email: info@ryckotechnical.com

Penn Lawn Mowers
19-21 Parkside Ind Estate Hants BH24 3SG Ringwood
Phone: 01425 479386
Fax: 01425 479386
Email: sales@penn-lawn-mowers.co.uk

Brighton Tools & Fixings
Unit 7,Centenary Ind Estate Hughes Road, Off Hollingdean Road Sussex Est BN2 4AW Brighton
Phone: 01273 620 456
Fax: 01273 620611
Email: wayne@brightontools.co.uk

Tooltech Industrial Equip
227 E Dunhill Road Macosquin Coleraine Co Londonderry BT514LQ
Phone: 028 70359493
Email: john@tooltech.org.uk

The Lawnmower Company
Unit B1, North Cheshire Trading Estate Prenton CH43 3DU Wirral
Phone: 0151 609 0652
Fax: 0151 608 7615
Email: tlcwirral@aol.com

C J Sinclair Limited
44 Victoria Road St Peters KENT CT10 2UG Broadstairs
Phone: 01843 869400
Fax: 01843 869400
Email: repairs@cjsinclairltd.co.uk

ACD PLANT LTD
145 Southbank Road Coundon CV6 1FG Coventry
Phone: 02476 594348
Email: danmcgunigle@acdplant.co.uk

Vale Garden & Leisure
King Street Middlewich Cheshire CW10 9LF
Phone: 01606 841800
Email: garden@valemotorcycles.co.uk

JWC Tool Repairs
Unit 6 Hills Centre Johnstown Road Dun Laoghire Co Dublin 18
Phone: 01 2369877
Email: jwc.toolrepairs@eircom.net

Frank Clark Ltd
Doughcloyne Industrial Estate Sarsfield Road Wilton, Cork EIRE
Phone: 00353 21 4542222
Email: vicky@frankclark.ie

Murray Power Tools
10 Primrose Avenue Grangemouth FK3 8YD Falkirk
Phone: 01324 486218
Fax: 01324 666184
Email: info@murraypowertools.com

Austin Eames
Plas Acton Wrexham North Wales LL11 2UB
Phone: 01978 261095
Email: austineames@btconnect.com

Wrexham Power Tools
Five Fords Gate, Bridge Road, Wrexham Ind Estate Wrexham LL13 9PS Wrexham
Phone: 01978 660011
Fax: 01978 664644
Email: info@wrexhampower.co.uk

Lawnmower Service Limited
Grantham Road, Wellingore LN5 0HH Lincolnshire
Phone: 01522 810562

Power Tool Solutions
321 Newark Road Bracebridge LN5 8PE LINCOLN
Phone: 01522 535352
Fax: 01592 519005
Email: sales@powertoolsolutions.co.uk

C D Powertools
76 Old Road Churwell Morley LS27 7TH Leeds
Phone: 0113 271 84 94
Fax: 0113 270 99 55
Email: info@cdpowertools.co.uk

Henton & Chattell Limited
London Road Nottingham NG2 3HW
Phone: 0115 986 2161
Email: service@hentonandchattell.com

Garden Machines (Northampton)
66-70 Kingsthorpe Road NN2 6HD Northampton
Phone: 01604 716222
Email: jackbrown@gardenmachinesltd.co.uk

CBS Power Tools Limited
Unit 4, V P Square Fengate PE1 5YS Peterborough
Phone: 01733 343031
Email: keith@cbspowertools.co.uk

Plymouth Tools & Spares
111 Victoria Road St Budeaux PL15 1RX Plymouth
Phone: 01752 361474
Fax: 01752 366133
Email: info@plymouthtools.com

Island Power Tools & Hire Centre
Unit D 5 Spithead Bus Centre, Newport Road, Sandown Isle of Wight PO36 9PH Sandown
Phone: 01983 404546
Fax: 404241
Email: steve@islandpowertools.wanadoo.co.uk

Aldermaston Tools
Unit 47 Young's Ind Estate RG7 4PW Aldermaston
Phone: 0118 981 1470
Fax: 0118 981 6879
Email: aldermaston@btconnect.com

CME Plant
Bryn Y Groes Farm Ystradgynlais West Glamorgan SA9 1LF
Phone: 01639 845184
Email: becca@cme-direct.co.uk

Southern Power Tool Services
Unit A Nickel Close Winnall Hampshire SO23 7RJ Winchester
Phone: 01962 863507

Tool-Line Limited
480-486 London Road Westcliff on sea Essex SS0 9LD Westcliff-On-Sea
Phone: 01702 391791

Marshall & Parsons
1111 London Road Leigh on Sea Essex SS9 3JL Leigh-On-Sea
Phone: 01702 470100

POWERTECH IND LTD
Unit 2c Ellisons Road Killmarsh S21 2JG Sheffield
Phone: 0114 247 4080
Email: workshop@powertech-industrial.co.uk

Toolfix Limited
Unit 8 Quay Road Brunel Ind Estate TQ12 4DZ Newton Abbot
Phone: 01626 362129

Celtic Engineering
Water-Ma-Trout Ind Est Helston Cornwall TR13 OLW
Phone: 01326 574961
Email: celticeng@btconnect.com

Heath Hayes Marine
49 Stafford Street Heath Hayes Cannock, Staffs WS12 2EH
Phone: 01543 275048
Email: hhmsales@btconnect.com

PTRS
90/2 Lagan Road Dublin Ind Estate Glasnevin Dublin 11
Phone: 01 8305866
Email: enquiries@powertool.ie

Paragon Power Tools Ltd
11-12 Cookstown Enterprise Park, Tallaght Dublin 24
Phone: 00353014596999
Email: service@paragonpt.com

Donegal Fixings
Glerczou Business Park Mouicle Co Donegal
Phone: 074 93 82046
Email: donegalfixings@yahoo.ie

J W Tools
Unit 8 Oranmore Business Park Oranmore Co Galway
Phone: 091 792880
Email: joewhelan@lawnking.ie

DALY INDUSTRIAL
95 Lower Glanmire Road Cork Ireland
Phone: 00353 21 4500051
Fax: 00353221450820 3
Email: info@disc.ie

For an updated list of authorised service centres, visit http://uk.ryobitools.eu/service-agents-ryobi.htm.

DECLARATION OF CONFORMITY

Techtronic Industries GmbH
Max-Eyth-Straße 10, 71364 Winnenden, Germany

Herewith we declare that the product
Shredder
Brand: Ryobi
Model number: RSH2455
Serial number range: 44433801000001 - 44433801999999

is in conformity with the following European Directives and harmonised standards
2006/42/EC, 2004/108/EC, 2000/14/EC, 2005/88/EC, 2011/65/EU

and furthermore, we declare that the following (parts/clauses of) European harmonised standards have been used
EN 55014-1:2006+A1:2009+A2:2011, EN 55014-2:1997+A1:2001+A2:2008, EN 61000-3-2:2006+A1:2009+A2:2009, EN 61000-3-3:2013, EN 60335-1:2012, EN 13683:2003+A2:2011/AC 2013, EN 50581:2012

Measured sound power level: 92 dB(A)
Guaranteed sound power level: 94 dB(A)

Conformity assessment method to Annex V Directive 2000/14/EC amended by 2005/88/EC.



CE

Andrew John Eyre (BEng, CEng, MIET)
Vice President, Regulatory & Safety
Winnenden, Aug 19, 2014

Authorised to compile the technical file:
Alexander Krug, Managing Director
Techtronic Industries GmbH
Max-Eyth-Straße 10, 71364 Winnenden, Germany

20140912v5