RYOBI

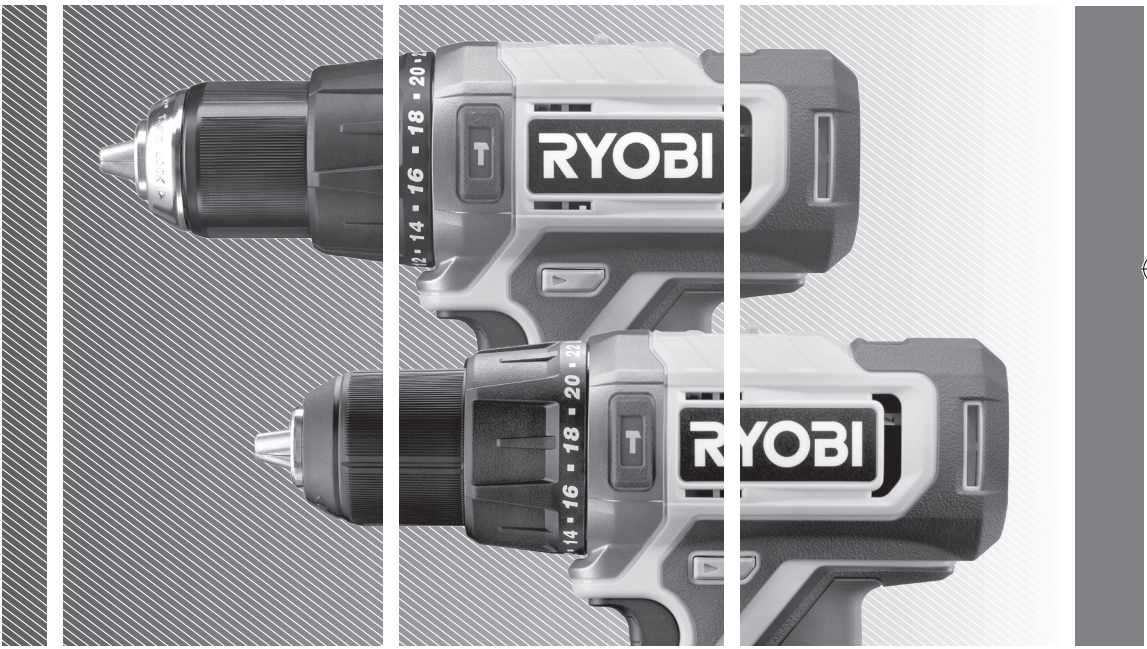

RPD18
RPD181

IMPORTANT!

It is essential that you read the instructions in this manual before assembling, operating, and maintaining the product.

Subject to technical modifications.

Safety, performance, and dependability have been given top priority in the design of your percussion drill.

INTENDED USE

The percussion drill is intended to be used only by adults who have read and understood the instructions and warnings in this manual, and can be considered responsible for their actions.

The product is intended for drilling into various materials, including wood, metal, and plastics using a drill bit having a shank diameter of less than 13 mm. The product can be used to drive and remove screws and bolts using an appropriate bit.

The product is intended for consumer use only.

Do not use the product for any other purpose. Use of the product for operations different from intended could result in a hazardous situation.

GENERAL POWER TOOL SAFETY WARNINGS

⚠ **WARNING! Read all safety warnings, instructions, illustrations and specifications provided with this power tool.** Failure to follow all instructions listed below may result in electric shock, fire and/or serious injury.

Save all warnings and instructions for future reference.

The term “power tool’’ in the warnings refers to your mains-operated (corded) power tool or battery-operated (cordless) power tool.

WORK AREA SAFETY

- **Keep work area clean and well lit.** Cluttered or dark areas invite accidents.
- **Do not operate power tools in explosive atmospheres, such as in the presence of flammable liquids, gases or dust.** Power tools create sparks which may ignite the dust or fumes.
- **Keep children and bystanders away while operating a power tool.** Distractions can cause you to lose control.

ELECTRICAL SAFETY

- **Power tool plugs must match the outlet. Never modify the plug in any way. Do not use any adapter plugs with earthed (grounded) power tools.** Unmodified plugs and matching outlets will reduce risk of electric shock.
- **Avoid body contact with earthed or grounded surfaces, such as pipes, radiators, ranges and refrigerators.** There is an increased risk of electric shock if your body is earthed or grounded.
- **Do not expose power tools to rain or wet conditions.** Water entering a power tool will increase the risk of electric shock.
- **Do not abuse the cord. Never use the cord for carrying, pulling or unplugging the power tool. Keep cord away from heat, oil, sharp edges or moving parts.** Damaged or entangled cords increase the risk of electric shock.
- **When operating a power tool outdoors, use an extension cord suitable for outdoor use.** Use of a cord suitable for outdoor use reduces the risk of electric shock.
- **If operating a power tool in a damp location is unavoidable, use a residual current device (RCD) protected supply.** Use of an RCD reduces the risk of electric shock.

PERSONAL SAFETY

- **Stay alert, watch what you are doing and use common sense when operating a power tool. Do not use a power tool while you are tired or under the influence of drugs, alcohol or medication.** A moment of inattention while operating power tools may result in serious personal injury.
- **Use personal protective equipment. Always wear eye protection.** Protective equipment such as a dust mask, non-skid safety shoes, hard hat or hearing protection used for appropriate conditions will reduce personal injuries.
- **Prevent unintentional starting. Ensure the switch is in the off-position before connecting to power source and/or battery pack, picking up or carrying the tool.** Carrying power tools with your finger on the switch or energising power tools that have the switch on invites accidents.
- **Remove any adjusting key or wrench before turning the power tool on.** A wrench or a key left attached to a rotating part of the power tool may result in personal injury.
- **Do not overreach. Keep proper footing and balance at all times.** This enables better control of the power tool in unexpected situations.
- **Dress properly. Do not wear loose clothing or jewellery. Keep your hair and clothing away from moving parts.** Loose clothes, jewellery or long hair can be caught in moving parts.
- **If devices are provided for the connection of dust extraction and collection facilities, ensure these are connected and properly used.** Use of dust collection can reduce dust-related hazards.
- **Do not let familiarity gained from frequent use of tools allow you to become complacent and ignore tool safety principles.** A careless action can cause severe injury within a fraction of a second.

POWER TOOL USE AND CARE

- **Do not force the power tool. Use the correct power tool for your application.** The correct power tool will do the job better and safer at the rate for which it was designed.
- **Do not use the power tool if the switch does not turn it on and off.** Any power tool that cannot be controlled with switch is dangerous and must be repaired.
- **Disconnect the plug from the power source and/or remove the battery pack, if detachable, from the power tool before making any adjustments, changing accessories, or storing power tools.** Such preventive safety measures reduce the risk of starting the power tool accidentally.
- **Store idle power tools out of the reach of children and do not allow persons unfamiliar with the power tool or these instructions to operate the power tool.** Power tools are dangerous in the hands of untrained users.

- **Maintain power tools and accessories. Check for misalignment or binding of moving parts, breakage of parts and any other condition that may affect the power tool's operation. If damaged, have the power tool repaired before use.** Many accidents are caused by poorly maintained power tools.
- **Keep cutting tools sharp and clean.** Properly maintained cutting tools with sharp cutting edges are less likely to bind and are easier to control.
- **Use the power tool, accessories and tool bits etc. in accordance with these instructions, taking into account the working conditions and the work to be performed.** Use of the power tool for operations different from those intended could result in a hazardous situation.
- **Keep handles and grasping surfaces dry, clean and free from oil and grease.** Slippery handles and grasping surfaces do not allow for safe handling and control of the tool in unexpected situations.

BATTERY TOOL USE AND CARE

- **Recharge only with the charger specified by the manufacturer.** A charger that is suitable for one type of battery pack may create a risk of fire when used with another battery pack.
- **Use power tools only with specifically designated battery packs.** Use of any other battery packs may create a risk of injury and fire.
- **When battery pack is not in use, keep it away from other metal objects, like paper clips, coins, keys, nails, screws or other small metal objects, that can make a connection from one terminal to another.** Shorting the battery terminals together may cause burns or a fire.
- **Under abusive conditions, liquid may be ejected from the battery; avoid contact. If contact accidentally occurs, flush with water. If liquid contacts eyes, additionally seek medical help.** Liquid ejected from the battery may cause irritation or burns.
- **Do not use a battery pack or tool that is damaged or modified.** Damaged or modified batteries may exhibit unpredictable behaviour resulting in fire, explosion or risk of injury.
- **Do not expose a battery pack or tool to fire or excessive temperature.** Exposure to fire or temperature above **130**°C may cause explosion.
- **Follow all charging instructions and do not charge the battery pack or tool outside the temperature range specified in the instructions.** Charging improperly or at temperatures outside the specified range may damage the battery and increase the risk of fire.

SERVICE

- **Have your power tool serviced by a qualified repair person using only identical replacement parts.** This will ensure that the safety of the power tool is maintained.
- **Never service damaged battery packs.** Service of battery packs should only be performed by the manufacturer or authorised service providers.

PERCUSSION DRILL SAFETY WARNINGS

SAFETY INSTRUCTIONS FOR ALL OPERATIONS

- **Wear ear protectors when impact drilling.** Exposure to noise can cause hearing loss.
- **Hold the power tool by insulated gripping surfaces, when performing an operation where the cutting accessory or fasteners may contact hidden wiring.** Cutting accessory or fasteners contacting a "live" wire may make exposed metal parts of the power tool "live" and could give the operator an electric shock.

SAFETY INSTRUCTIONS WHEN USING LONG DRILL BITS

- **Never operate at higher speed than the maximum speed rating of the drill bit.** At higher speeds, the bit is likely to bend if allowed to rotate freely without contacting the workpiece, resulting in personal injury.
- **Always start drilling at low speed and with the bit tip in contact with the workpiece.** At higher speeds, the bit is likely to bend if allowed to rotate freely without contacting the workpiece, resulting in personal injury.
- **Apply pressure only in direct line with the bit and do not apply excessive pressure.** Bits can bend causing breakage or loss of control, resulting in personal injury.

ADDITIONAL SAFETY WARNINGS

- Clamp workpiece with a clamping device. Unclamped workpieces can cause severe injury and damage.
- Dust created by operating the product can cause respiratory injury. Wear appropriate dust control mask with filters suitable for protecting against particles from the material being worked on.
- Injuries may be caused, or aggravated, by prolonged use of a tool. When using any tool for prolonged periods, ensure you take regular breaks.
- Switch off the product immediately if the bit stalls. Do not switch on the product again while the bit is stalled, as doing so could trigger a sudden recoil with a high reactive force. Determine why the bit stalled and rectify this, paying heed to the safety instructions.
  The possible causes may be:
  - it is tilted in the workpiece
  - it has pierced the workpiece
  - the product is overloaded
- Ambient temperature range for tool during operation is between 0 ˚C and 40˚ C.
- Ambient temperature range for tool storage is between 0 ˚C and 40˚ C.
- The recommended ambient temperature range for the charging system during charging is between 10 ˚C and 38˚ C.

ADDITIONAL BATTERY SAFETY WARNINGS

- To reduce the risk of fire, personal injury, and product damage due to a short circuit, never immerse your tool, battery pack or charger in fluid or allow a fluid to flow inside them. Corrosive or conductive fluids, such as seawater, certain industrial chemicals, and bleach or bleach-containing products, etc., can cause a short circuit.

- Ambient temperature range for battery during use is between 0 ˚C and 40˚ C.
- Ambient temperature range for battery storage is between 0 ˚C and 20˚ C.

TRANSPORTING LITHIUM BATTERIES

Transport the battery in accordance with local and national provisions and regulations.

Follow all special requirements on packaging and labelling when transporting batteries by a third party. Ensure that no batteries can come in contact with other batteries or conductive materials while in transport by protecting exposed connectors with insulating, non-conductive caps or tape. Do not transport batteries that are cracked or leaking. Check with the forwarding company for further advice.

KNOW YOUR PRODUCT

See page 5.

1. Gear selector
2. Torque adjustment ring
3. Keyless chuck
4. Direction of rotation selector
5. Variable speed trigger
6. Handle, insulated gripping surface
7. LED light
8. Battery port
9. Screw driver bit
10. Operator's manual
11. Drill bit
12. Drill bit
13. Battery pack
14. Charger

MAINTENANCE

- The product should never be connected to a power supply when assembling parts, making adjustments, cleaning, performing maintenance, or when the product is not in use. Disconnecting the product from the power supply will prevent accidental starting that could cause serious injury.
- When servicing, use only original manufacturer's replacement parts, accessories and attachments. Use of any other parts may create a hazard or cause product damage.
- Avoid using solvents when cleaning plastic parts. Most plastics are susceptible to various types of commercial solvents and may be damaged by their use. Use clean cloths to remove dirt, carbon dust, etc.
- Do not at any time let brake fluids, gasoline, petroleum-based products, penetrating oils, etc., come in contact with plastic parts. Chemicals can damage, weaken or destroy plastic which may result in serious personal injury.
- For greater safety and reliability, all repairs should be performed by an authorised service centre.

SYMBOLS


Safety alert


Direct current


Please read the instructions carefully before starting the machine.


Torque, maximum


Torque, minimum


Do not dispose of waste batteries, waste electrical and electronic equipment as unsorted municipal waste. Waste batteries and waste electrical and electronic equipment must be collected separately. Waste batteries, waste accumulators, and light sources have to be removed from the equipment. Check with your local authority or retailer for recycling advice and collection point. According to local regulations, retailers may have an obligation to take back waste batteries and waste electrical and electronic equipment free of charge. Your contribution to the reuse and recycling of waste batteries and waste electrical and electronic equipment helps to reduce the demand of raw materials. Waste batteries, in particular containing lithium, and waste electrical and electronic equipment contain valuable and recyclable materials, which can adversely impact the environment and the human health if not disposed of in an environmentally compatible manner. Delete personal data from waste equipment, if any.

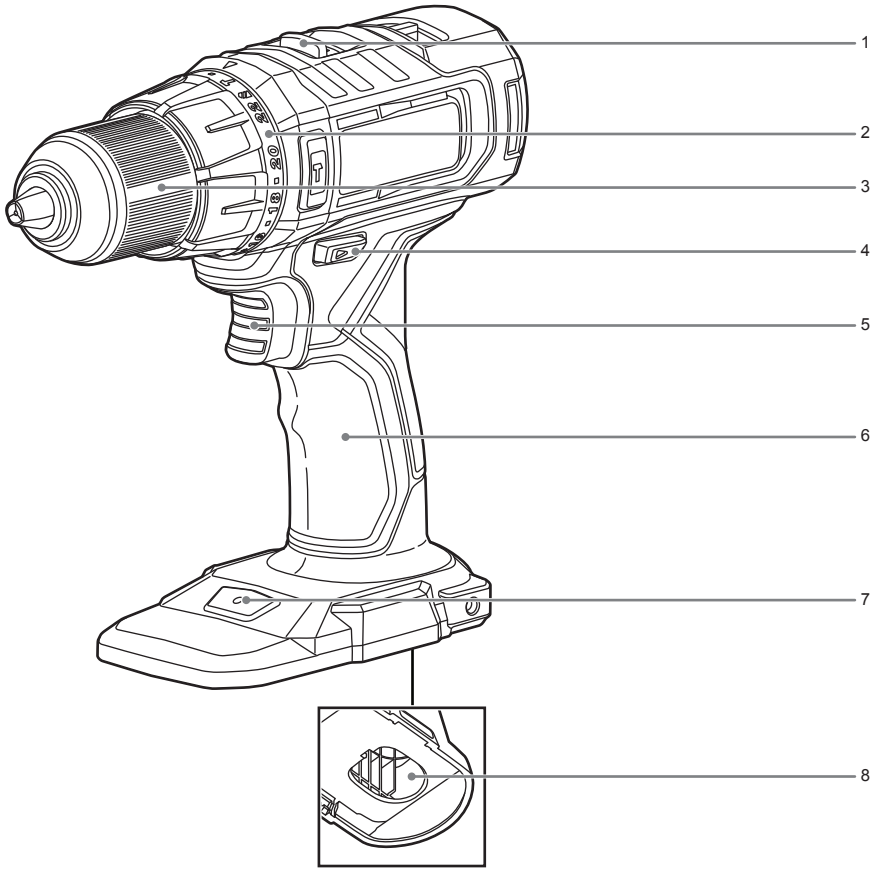
1
2
3
4
5
6
7
8

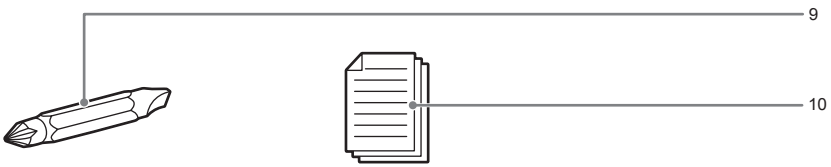
9
10

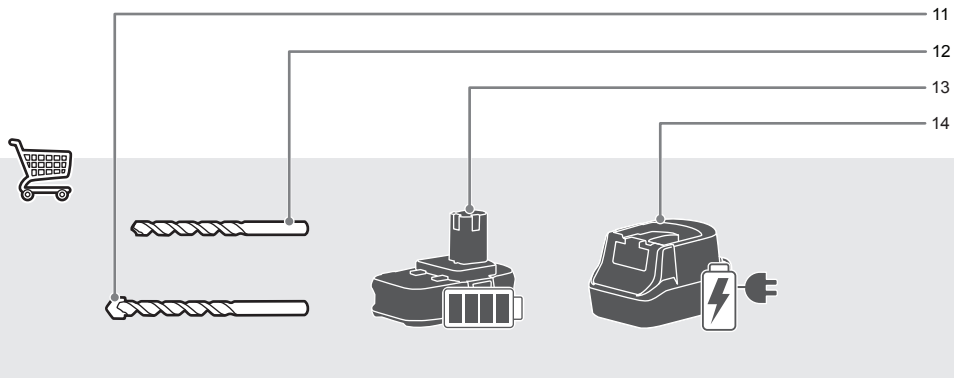
11
12
13
14

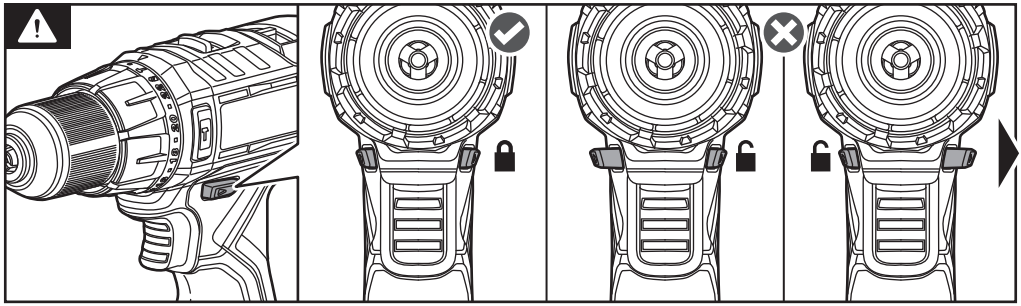

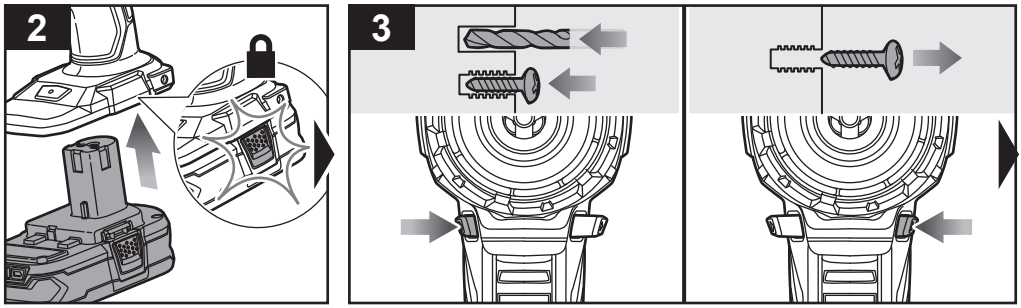
2
3

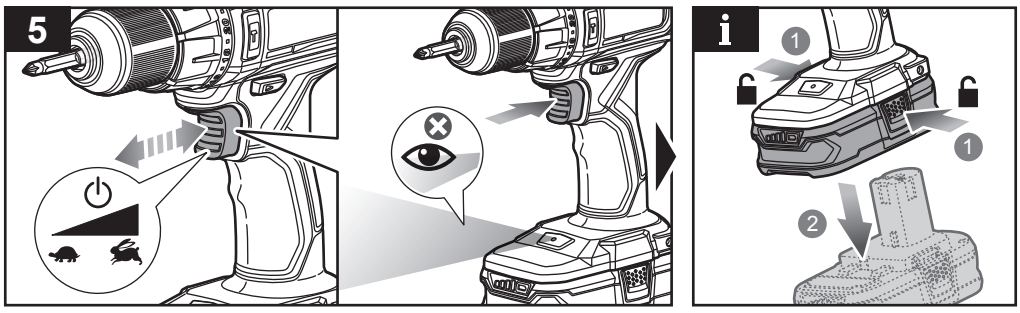
5
i
1
1
2

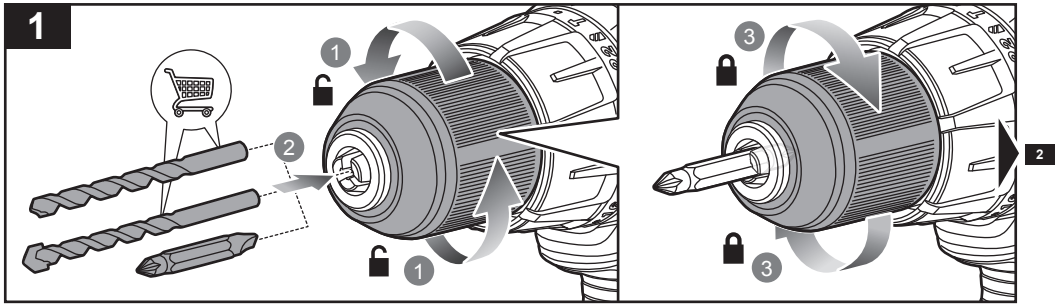

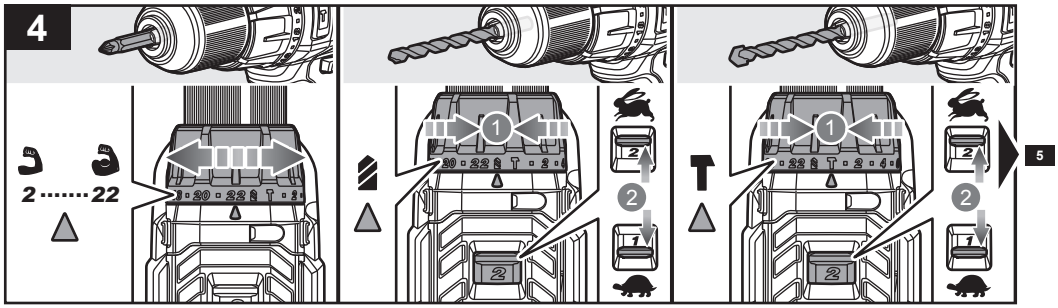

20231220v3

PRODUCT SPECIFICATIONS

Percussion drill	
Model	RPD18 RPD181
Voltage	18 V ⎓
Chuck	2-13 mm
Switch	Variable speed
No load speed (drill mode)	
- Lo speed	0-450 rpm
- Hi speed	0-1750 rpm
Impact rate (percussion drill mode)	
- Lo speed	0-7200 ipm
- Hi speed	0-28000 ipm
Clutch (positions)	24
Maximum torque	52 Nm
Maximum drilling capacity in wood	38 mm
Maximum drilling capacity in metal	13 mm
Maximum drilling capacity in masonry	13 mm
Weight - not incl. battery pack	1.2 kg
Weight (According to EPTA procedure 01/2014)	1.6 kg (1.3Ah) - 2.4 kg (9.0Ah)
Measured sound values determined according to EN 62841:	
A-weighted sound pressure level Uncertainty K	L_p = 93.0 dB(A) 5 dB(A)
A-weighted sound power level Uncertainty K	L_w = 101.0 dB(A) 5 dB(A)
Wear ear protectors.	
The vibration total values (triaxial vector sum) determined according to EN 62841:	
Drilling into metal	a_h = 1.5 m/s^2
Uncertainty K	1.5 m/s^2
Impact drilling into concrete	$a_{h,ID}$ = 15.1 m/s^2
Uncertainty K	1.5 m/s^2

BATTERY AND CHARGER

Compatible battery pack (not included)	RB18..
Compatible charger (not included)	BCL1418..H RC18..

⚠ **WARNING!** The declared vibration total values and the declared noise emission values given in this instruction manual have been measured in accordance with a standardised test and may be used to compare one tool with another. They may be used for a preliminary assessment of exposure.

The declared vibration and noise emission values represent the main applications of the tool. However, if the tool is used for different applications, used with different accessories, or poorly maintained, the vibration and noise emission may differ. These conditions may significantly increase the exposure levels over the total working period.

An estimation of the level of exposure to vibration and noise should take into account the times when the tool is turned off or when it is running idle. These conditions may significantly reduce the exposure level over the total working period.

Identify additional safety measures to protect the operator from the effects of vibration and noise, such as maintaining the tool and the accessories, keeping the hands warm (in case of vibration), and organising work patterns.

RYOBI WARRANTY APPLICATION CONDITIONS

In addition to any statutory rights arising from the purchase of a product and without prejudice on the statutory rights which apply independently and free of charge, all new RYOBI branded power tools and/or garden tools listed on our website, excluding tool accessories, tool storage systems, and spare parts, as further outlined under ("Product"), are covered by a voluntary guarantee issued by Techtronic Industries GmbH ("TTI") subject to the terms and conditions as stated below ("Guarantee").

The Guarantee is only applicable to purchaser(s) who purchase the products as end users in their capacity as consumers ("Consumer"). Retailers, rental companies, as well as professional end users are expressly excluded from these general terms and conditions of the Guarantee. For professional end users, a different type of voluntary guarantee may be applicable to certain product(s), if explicitly provided on the www.ryobitools.eu website. The invocation of this voluntary Guarantee does not limit the statutory legal rights of the Consumer in case of a defect.

1. The standard guarantee ("Standard Guarantee"), provided that the Product is purchased for private use only, has a term of 24 months ("Standard Guarantee Period") and commences on the date the product was purchased. This date must be documented by an invoice or other proof of purchase in order for the Standard Guarantee to be valid and enforceable. This Standard Guarantee also only applies to new Product(s).
2. Consumers in certain countries may be able to extend the Standard Guarantee for eligible Products beyond the period of the Standard Guarantee by registering on the www.ryobitools.eu website. The eligibility of Products for the extended guarantee ("Extended Guarantee") is specified on the packaging of a Product, on the website at www.ryobitools.eu, and/or is contained within the relevant Product documentation under https://www.ryobitools.eu/. In order to benefit from the Extended Guarantee, Consumers are required to register their Product(s) online within 30 calendar days from the date of purchase to benefit from this Extended Guarantee. All personal information of a Consumer will be processed in accordance with the privacy statement, which can be found here https://uk.ryobitools.eu/footer-links/privacy-policy/. The registration confirmation receipt, which is sent out by e-mail, and the original invoice showing the date of purchase will serve as proof of the Extended Guarantee.
3. The Standard Guarantee and the Extended Guarantee ("Guarantees") are limited to repair and/or replacement of the defective Product at the discretion of TTI provided that the defect in workmanship or material existed at the date of purchase. No further costs or losses can be claimed. In addition, the Guarantees do not apply to:
   - any damage caused accidentally, wilfully, or negligently by the Consumer
   - any damage to the Product that is the result of improper treatment or lack of maintenance
   - any Product that has been altered or modified
   - any Product where original identification (trade mark, serial number) markings have been defaced, altered or removed
   - any damage caused by non-observance of the instruction manual
   - Products, which are not subject to a CE/UKCA marking
   - any Product that has been attempted to be repaired by a non-authorised service centre or without prior authorisation by TTI
   - any Product connected to improper power supply (amps, voltage, frequency)
   - any Product used with inappropriate fuel mixture (fuel, oil, ratio of oil)
   - any damage caused by external influences (water, chemical, physical, shocks) or foreign substances
   - normal wear and tear of spare parts
   - inappropriate use, overloading of the Product(s)
   - use of non-approved accessories or parts
   - power tool accessories provided with the tool or purchased separately. Such exclusions including but not limited to screw driver bits, drill bits, abrasive discs, sand paper and blades, lateral guide
   - components (parts and accessories) which are subject to normal wear and tear, including but not limited to service and maintenance kits, carbon brushes, bearings, chuck, SDS drill bit attachment or reception, power cord, auxiliary handle, transport carry case, sanding plate, dust bag, dust exhaust tube, felt washers, impact wrench pins and springs, bump knobs, drive belts, clutch, blades of hedge trimmers or lawnmowers, harness, cable throttle, tines, felt washers, hitch pins, blower fans, blower and vacuum tubes, vacuum bag and straps, guide bars, saw chains, hoses, connector fittings, spray nozzles, wheels, spray wands, inner reels, outer spools, cutting lines, spark plugs, air filters, gas filters, mulching blades, etc.
4. For guarantee servicing, the Product(s) must be sent or presented without undue delay after occurrence or recognition of the defect in workmanship or material to an authorised RYOBI service partner listed on the following website https://www.ryobitools.eu/. Consumers can obtain the services under the Guarantees from a RYOBI service partner by
   a. contacting the retailer where the purchase was made; or
   b. registering via the service platform available on the RYOBI Commercial webpage https://www.ryobitools.eu/, the availability of the process might vary from country to country.

   When sending a Product to an authorised RYOBI service partner, the Product shall be safely packaged without hazardous contents (for details, please see the safety instructions on the website at https://www.ryobitools.eu/), marked with sender's address and accompanied by a short description of the defect. Please note that in some countries delivery charges or postage will have to be paid by the sender according to local practice. Please consult your local authorised RYOBI service centre to confirm whether such charges apply.
5. Upon receipt of the Product claimed to be defective by the Consumer, it will be inspected. When the defect has been confirmed, the services under the Guarantees will be provided by repairing the defective parts of the products or replacing them by non-defective parts at TTI's discretion. If TTI refuses to repair the defect or if, at TTI's discretion, the repair has failed, an equivalent replacement will be supplied. The replaced Product(s) or part(s) will become the property of TTI. Any repair/replacement(s) under the Guarantees above are free of charge. The repair/replacement(s) conducted by TTI do not constitute an extension or a new start of the Guarantees. The replaced spare parts are subject to the Guarantees originally given and the period for the Guarantees will end with period for the Guarantee that was originally given for the entire product.
6. The RYOBI Guarantees are granted by Techtronic Industries GmbH, Max-Eyth-Str.10, 71364 Winnenden, Germany, only to the Consumer that originally purchased the Product and may not be transferred or assigned.
7. The Guarantees are valid in the European Economical Areas (EEA), Switzerland, and the United Kingdom. Outside these areas, please contact the retailer where the purchase was made to find out if another voluntary guarantee applies.

AUTHORISED SERVICE CENTRE

Any request or issue with the product can be addressed to your local authorised service centres (visit www.ryobitools.eu) or directly to: Techtronic Industries GmbH, Max Eyth Straße 10, 71364 Winnenden, Germany. Please state the serial number and product type printed on the label.

AUTHORISED SERVICE CENTRES

Any request or issue with the product can be addressed to your local authorised service centres (visit www.ryobitools.eu) or directly to: Techtronic Industries GmbH, Max Eyth Straße 10, 71364 Winnenden, Germany. Please state the serial number and product type printed on the label.

EC DECLARATION OF CONFORMITY

Manufacturer: Techtronic Industries GmbH
Max-Eyth-Straße 10, 71364 Winnenden, Germany

We declare as the manufacturer under our sole responsibility that the product mentioned below

Percussion drill
Brand: RYOBI
Model number: RPD18/RPD181
Serial number range:
RPD18: 47576702000001 - 47576702999999
RPD181: 48605402000001 – 48605402999999

fulfills all the relevant provisions of the following European Directives, European Regulations and harmonised standards.

2006/42/EC, 2014/30/EU, 2011/65/EU
EN IEC 55014-1:2021, EN IEC 55014-2:2021, EN 62841-1:2015+A11:2022, EN 62841-2-1:2018+A11:2019+A1:2022+A12:2022, EN IEC 63000:2018



Todd Chipner
Senior Vice President, Quality – Asia
Winnenden, Dec. 30, 2023

Authorised to compile the technical file:
Techtronic Industries GmbH
Max-Eyth-Straße 10, 71364 Winnenden, Germany

GB-DECLARATION OF CONFORMITY

Manufacturer: Techtronic Industries GmbH
Max-Eyth-Straße 10, 71364 Winnenden, Germany

We declare as the manufacturer under our sole responsibility that the product mentioned below

Percussion drill
Brand: RYOBI
Model number: RPD18/RPD181
Serial number range:
RPD18: 47576702000001 - 47576702999999
RPD181: 48605402000001 – 48605402999999

fulfills all the relevant provisions of the following Regulations: S.I. 2008/1597 (as amended), S.I. 2016/1091 (as amended), S.I. 2012/3032 (as amended) and that the following designated standards have been used:

BS EN IEC 55014-1:2021, BS EN IEC 55014-2:2021,
BS EN 62841-1:2015+A11:2022, BS EN 62841-2-1:2018+A1:2022,
BS EN IEC 63000:2018



Todd Chipner
Senior Vice President, Quality – Asia
Winnenden, Dec. 30, 2023

Authorised to compile the technical file:
Techtronic Industries (UK) Ltd
Parkway
Marlow Bucks SL7 1YL
UK

RYOBI is a trade mark of Ryobi Limited, and is used under license.

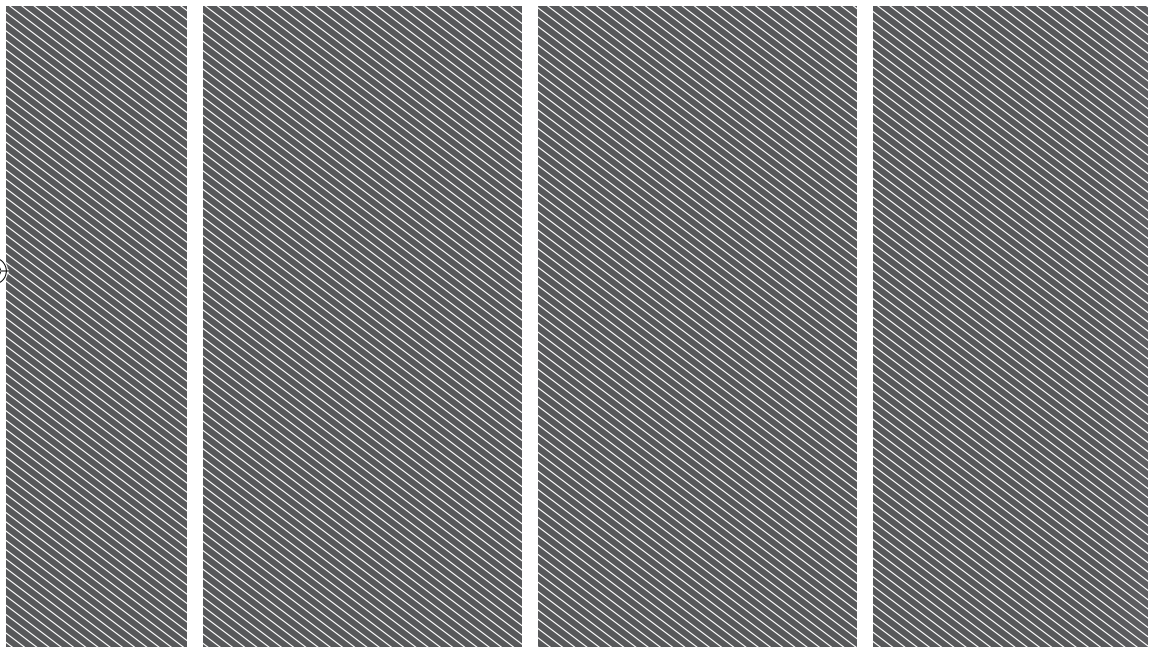

Techtronic Industries GmbH
Max-Eyth-Straße 10,
71364 Winnenden, Germany

Techtronic Industries (UK) Ltd
Parkway
Marlow Bucks SL7 1YL
UK

961075802-01