RYOBI

ORIGINAL INSTRUCTIONS

Cordless Circular Saw

R18CSP



Important!

It is essential that you read the instructions in this manual before assembling, operating, and maintaining the product.

Subject to technical modification.

Safety, performance, and dependability have been given top priority in the design of your cordless circular saw.

INTENDED USE

The product is intended to be used only by adults who have read and understood the instructions and warnings in this manual, and can be considered responsible for their actions.

The saw is designed for rip- and cross-cutting of wood or similar materials up to a maximum depth of 45 mm. It can make straight or bevelled cuts between 0 and 50 degrees. It is to be used with the base of the tool in contact with the workpiece. It should only be used in a dry, well lit and well ventilated area. The circular saw is designed for handheld use. It is not to be mounted onto a workbench unless specific instructions about how to do this are given by the manufacturer of the saw. Do not use for cutting metal or masonry. Do not use the product in any way other than those stated for intended use. Use of the product for operations different from intended could result in a hazardous situation.

GENERAL POWER TOOL SAFETY WARNINGS

⚠ WARNING

Read all safety warnings, instructions, illustrations and specifications provided with this power tool. Failure to follow all instructions listed below may result in electric shock, fire and/or serious injury.

Save all warnings and instructions for future reference.

The term “power tool’’ in the warnings refers to your mains-operated (corded) power tool or battery-operated (cordless) power tool.

WORK AREA SAFETY

- **Keep work area clean and well lit.** Cluttered or dark areas invite accidents.
- **Do not operate power tools in explosive atmospheres, such as in the presence of flammable liquids, gases or dust.** Power tools create sparks which may ignite the dust or fumes.
- **Keep children and bystanders away while operating a power tool.** Distractions can cause you to lose control.

ELECTRICAL SAFETY

- **Power tool plugs must match the outlet. Never modify the plug in any way. Do not use any adapter plugs with earthed (grounded) power tools.** Unmodified plugs and matching outlets will reduce risk of electric shock.
- **Avoid body contact with earthed or grounded surfaces, such as pipes, radiators, ranges and refrigerators.** There is an increased risk of electric shock if your body is earthed or grounded.
- **Do not expose power tools to rain or wet conditions.** Water entering a power tool will increase the risk of electric shock.
- **Do not abuse the cord. Never use the cord for carrying, pulling or unplugging the power tool. Keep cord away from heat, oil, sharp edges or moving parts.** Damaged or entangled cords increase the risk of electric shock.
- **When operating a power tool outdoors, use an extension cord suitable for outdoor use.** Use of a cord suitable for outdoor use reduces the risk of electric shock.
- **If operating a power tool in a damp location is unavoidable, use a residual current device (RCD) protected supply.** Use of an RCD reduces the risk of electric shock.

PERSONAL SAFETY

- **Stay alert, watch what you are doing and use common sense when operating a power tool. Do not use a power tool while you are tired or under the influence of drugs, alcohol or medication.** A moment of inattention while operating power tools may result in serious personal injury.
- **Use personal protective equipment. Always wear eye protection.** Protective equipment such as dust mask, non-skid safety shoes, hard hat or hearing protection used for appropriate conditions will reduce personal injuries.
- **Prevent unintentional starting. Ensure the switch is in the off-position before connecting to power source and/or battery pack, picking up or carrying the tool.** Carrying power tools with your finger on the switch or energising power tools that have the switch on invites accidents.
- **Remove any adjusting key or wrench before turning the power tool on.** A wrench or a key left attached to a rotating part of the power tool may result in personal injury.
- **Do not overreach. Keep proper footing and balance at all times.** This enables better control of the power tool in unexpected situations.
- **Dress properly. Do not wear loose clothing or jewellery. Keep your hair and clothing away from moving parts.** Loose clothes, jewellery or long hair can be caught in moving parts.
- **If devices are provided for the connection of dust extraction and collection facilities, ensure these are connected and properly used.** Use of dust collection can reduce dust-related hazards.
- **Do not let familiarity gained from frequent use of tools allow you to become complacent and ignore tool safety principles.** A careless action can cause severe injury within a fraction of a second.

POWER TOOL USE AND CARE

- **Do not force the power tool. Use the correct power tool for your application.** The correct power tool will do the job better and safer at the rate for which it was designed.
- **Do not use the power tool if the switch does not turn it on and off.** Any power tool that cannot be controlled with the switch is dangerous and must be repaired.

- **Disconnect the plug from the power source and/ or remove the battery pack, if detachable, from the power tool before making any adjustments, changing accessories, or storing power tools.** Such preventive safety measures reduce the risk of starting the power tool accidentally.
- **Store idle power tools out of the reach of children and do not allow persons unfamiliar with the power tool or these instructions to operate the power tool.** Power tools are dangerous in the hands of untrained users.
- **Maintain power tools and accessories. Check for misalignment or binding of moving parts, breakage of parts and any other condition that may affect the power tool's operation. If damaged, have the power tool repaired before use.** Many accidents are caused by poorly maintained power tools.
- **Keep cutting tools sharp and clean.** Properly maintained cutting tools with sharp cutting edges are less likely to bind and are easier to control.
- **Use the power tool, accessories and tool bits etc. in accordance with these instructions, taking into account the working conditions and the work to be performed.** Use of the power tool for operations different from those intended could result in a hazardous situation.
- **Keep handles and grasping surfaces dry, clean and free from oil and grease.** Slippery handles and grasping surfaces do not allow for safe handling and control of the tool in unexpected situations.

BATTERY TOOL USE AND CARE

- **Recharge only with the charger specified by the manufacturer.** A charger that is suitable for one type of battery pack may create a risk of fire when used with another battery pack.
- **Use power tools only with specifically designated battery packs.** Use of any other battery packs may create a risk of injury and fire.
- **When battery pack is not in use, keep it away from other metal objects, like paper clips, coins, keys, nails, screws or other small metal objects, that can make a connection from one terminal to another.** Shorting the battery terminals together may cause burns or a fire.
- **Under abusive conditions, liquid may be ejected from the battery; avoid contact. If contact accidentally occurs, flush with water. If liquid contacts eyes, additionally seek medical help.** Liquid ejected from the battery may cause irritation or burns.
- **Do not use a battery pack or tool that is damaged or modified.** Damaged or modified batteries may exhibit unpredictable behaviour resulting in fire, explosion or risk of injury.
- **Do not expose a battery pack or tool to fire or excessive temperature.** Exposure to fire or temperature above 130°C may cause explosion.
- **Follow all charging instructions and do not charge the battery pack or tool outside the temperature range specified in the instructions.** Charging improperly or at temperatures outside the specified range may damage the battery and increase the risk of fire.

SERVICE

- **Have your power tool serviced by a qualified repair person using only identical replacement parts.** This will ensure that the safety of the power tool is maintained.
- **Never service damaged battery packs.** Service of battery packs should only be performed by the manufacturer or authorized service providers.

CIRCULAR SAW SAFETY WARNINGS

CUTTING PROCEDURES

- **DANGER! Keep hands away from cutting area and the blade. Keep your second hand on auxiliary handle, or motor housing.** If both hands are holding the saw, they cannot be cut by the blade.
- **Do not reach underneath the workpiece.** The guard cannot protect you from the blade below the workpiece.
- **Adjust the cutting depth to the thickness of the workpiece.** Less than a full tooth of the blade teeth should be visible below the workpiece.
- **Never hold the workpiece in your hands or across your leg while cutting. Secure the workpiece to a stable platform.** It is important to support the work properly to minimise body exposure, blade binding, or loss of control.
- **Hold the power tool by insulated gripping surfaces, when performing an operation where the cutting tool may contact hidden wiring or its own cord.** Contact with a "live" wire will also make exposed metal parts of the power tool "live" and could give the operator an electric shock.
- **When ripping, always use a rip fence or straight edge guide.** This improves the accuracy of cut and reduces the chance of blade binding.
- **Always use blades with correct size and shape (diamond versus round) of arbour holes.** Blades that do not match the mounting hardware of the saw will run off-centre, causing loss of control.
- **Never use damaged or incorrect blade washers or bolt.** The blade washers and bolt were specially designed for your saw, for optimum performance and safety of operation.

KICKBACK CAUSES AND RELATED WARNINGS:

- kickback is a sudden reaction to a pinched, jammed or misaligned saw blade, causing an uncontrolled saw to lift up and out of the workpiece toward the operator;
- when the blade is pinched or jammed tightly by the kerf closing down, the blade stalls and the motor reaction drives the unit rapidly back toward the operator;
- if the blade becomes twisted or misaligned in the cut, the teeth at the back edge of the blade can dig into the top surface of the wood causing the blade to climb out

of the kerf and jump back toward the operator.

Kickback is the result of saw misuse and/or incorrect operating procedures or conditions and can be avoided by taking proper precautions as given below.

- **Maintain a firm grip with both hands on the saw and position your arms to resist kickback forces. Position your body to either side of the blade, but not in line with the blade.** Kickback could cause the saw to jump backwards, but kickback forces can be controlled by the operator, if proper precautions are taken.
- **When blade is binding, or when interrupting a cut for any reason, release the trigger and hold the saw motionless in the material until the blade comes to a complete stop. Never attempt to remove the saw from the work or pull the saw backward while the blade is in motion or kickback may occur.** Investigate and take corrective actions to eliminate the cause of blade binding.
- **When restarting a saw in the workpiece, centre the saw blade in the kerf so that the saw teeth are not engaged into the material.** If a saw blade binds, it may walk up or kickback from the workpiece as the saw is restarted.
- **Support large panels to minimise the risk of blade pinching and kickback.** Large panels tend to sag under their own weight. Supports must be placed under the panel on both sides, near the line of cut and near the edge of the panel.
- **Do not use dull or damaged blades.** Unsharpened or improperly set blades produce narrow kerf causing excessive friction, blade binding and kickback.
- **Blade depth and bevel adjusting locking levers must be tight and secure before making the cut.** If blade adjustment shifts while cutting, it may cause binding and kickback.
- **Use extra caution when sawing into existing walls or other blind areas.** The protruding blade may cut objects that can cause kickback.

LOWER GUARD FUNCTION

- **Check the lower guard for proper closing before each use. Do not operate the saw if the lower guard does not move freely and close instantly. Never clamp or tie the lower guard into the open position.** If the saw is accidentally dropped, the lower guard may be bent. Raise the lower guard with the retracting handle and make sure it moves freely and does not touch the blade or any other part, in all angles and depths of cut.
- **Check the operation of the lower guard spring. If the guard and the spring are not operating properly, they must be serviced before use.** Lower guard may operate sluggishly due to damaged parts, gummy deposits, or a build-up of debris.
- **The lower guard may be retracted manually only for special cuts such as "plunge cuts" and "compound cuts". Raise the lower guard by the retracting handle and as soon as the blade enters the material, the lower guard must be released.** For all other sawing, the lower guard should operate automatically.
- **Always observe that the lower guard is covering the blade before placing the saw down on bench or floor.** An unprotected, coasting blade will cause the saw to walk backwards, cutting whatever is in its path. Be aware of the time it takes for the blade to stop after switch is released.

ADDITIONAL SAFETY WARNINGS

- **The dust produced when using the product may be harmful to your health, inflammable, or explosive. Do not inhale the dust.** Use a dust extraction system, and wear a suitable dust protection mask. Remove deposited dust thoroughly, e.g., with a brush and vacuum cleaner.
- **Do not use any abrasive wheels.**
- **Use only blades specified in this manual, complying with EN 847-1.**
- **Avoid overheating the blade tips. Do not use dull or damaged blades.** Do not force the tool.
- **Do not use blades of larger or smaller diameter than recommended.**
- Wear ear protection.
- **Clamp workpiece with a clamping device.** Unclamped workpieces can cause severe injury and damage.
- **Thoroughly check the material to be cut, particularly when using recycled wood, for foreign objects such as nails, screws, and staples.** If nails, screws, staples or similar items contact the blade whilst cutting, the saw will be damaged and severe injury to the operator or others may occur.
- **Do not touch the saw blade immediately after sawing.** The saw blade gets hot during sawing.
- Use only blade diameter(s) in accordance with the markings.
- Identify the correct saw blade to be used for the material to be cut.
- Use only saw blades that are marked with a speed equal or higher than the speed marked on the tool.
- Use only saw blades recommended by the manufacturer, which conform to EN 847-1, if intended for wood and analogous materials.
- Wear a dust mask.
- Ambient temperature range for tool during operation is between 0°C and 40°C.
- Ambient temperature range for tool storage is between 0°C and 40°C.
- The recommended ambient temperature range for the charging system during charging is between 10°C and 38°C.

⚠ WARNING

The product is not intended for use by persons (including children) with reduced physical, sensory or mental capabilities, or lack of experience and knowledge, unless they have been given supervision or instruction concerning use of the product by a person responsible for their safety.

Children should be supervised to ensure that they do not play with the product.

ADDITIONAL BATTERY SAFETY WARNINGS

⚠ WARNING

To reduce the risk of fire, personal injury, and product damage due to a short circuit, never immerse your tool, battery pack or charger in fluid or allow a fluid to flow inside them. Corrosive or conductive fluids, such as seawater, certain industrial chemicals, and bleach or bleach-containing products, etc., can cause a short circuit.

- Ambient temperature range for battery during use is between 0°C and 40°C.
- Ambient temperature range for battery storage is between 0°C and 20°C.

TRANSPORTING LITHIUM BATTERIES

Transport the battery in accordance with local and national provisions and regulations.

Follow all special requirements on packaging and labelling when transporting batteries by a third party. Ensure that no batteries can come in contact with other batteries or conductive materials while in transport by protecting exposed connectors with insulating, non-conductive caps or tape. Do not transport batteries that are cracked or leaking. Check with the forwarding company for further advice.

RESIDUAL RISKS

Even when the product is used as prescribed, it is still impossible to completely eliminate certain residual risk factors. The following hazards may arise and the operator should pay special attention to avoid the following:

- Injury caused by kickback
  - Read and understand the information in this manual.
- Injury caused by vibration
  - Limit exposure. See Risk Reduction.
- Injury caused by dust
  - Wear eye protection at all times. Wear appropriate dust mask with suitable filters that can protect against particles from the material being worked on. Do not eat, drink, or smoke in the work area. Ensure adequate ventilation.
- Electric shock
  - The blade may contact hidden wiring causing parts of the product to become live. Always hold the product by the designated handles and take care when blind-cutting into walls and floors where cables may be hidden.

  NOTE: When working on walls, ceilings, or floors, take care to avoid electric cables and gas or water pipes.
- Injury from contact with the cutting blade
  - The blades are sharp and will become hot during use. Wear gloves when changing blades. Keep hands away from the cutting area at all times. Never hold workpiece being cut in your hands or across your leg. Clamp the work piece whenever possible.

RISK REDUCTION

It has been reported that vibrations from handheld tools may contribute to a condition called Raynaud's Syndrome in certain individuals. Symptoms may include tingling, numbness, and blanching of the fingers, usually apparent upon exposure to cold. Hereditary factors, exposure to cold and dampness, diet, smoking, and work practices are all thought to contribute to the development of these symptoms. There are measures that can be taken by the operator to possibly reduce the effects of vibration:

- Keep your body warm in cold weather. When operating the unit, wear gloves to keep the hands and wrists warm. It is reported that cold weather is a major factor contributing to Raynaud's Syndrome.
- After each period of operation, exercise to increase blood circulation.
- Take frequent work breaks. Limit the amount of exposure per day.

If you experience any of the symptoms of this condition, immediately discontinue use and see your doctor about these symptoms.

⚠ WARNING

Injuries may be caused, or aggravated, by prolonged use of a tool. When using any tool for prolonged periods, ensure you take regular breaks.

MAINTENANCE

⚠ WARNING

The product should never be connected to a power supply when assembling parts, making adjustments, cleaning, performing maintenance, or when the product is not in use. Disconnecting the product will prevent accidental starting that could cause serious injury.

- When servicing, use only identical replacement parts. Use of any other parts may create a hazard or cause product damage.
- Avoid using solvents when cleaning plastic parts. Most plastics are susceptible to various types of commercial solvents and may be damaged by their use. Use clean cloths to remove dirt and carbon dust.
- Do not, at any time, let brake fluids, gasoline, petroleum-based products, penetrating oils, etc., come in contact

with plastic parts. They contain chemicals that can damage, weaken, or destroy plastic.

- Always wear safety goggles or safety glasses with side shields during power tool operation or when blowing dust. If operation is dusty, also wear a dust mask.
- For greater safety and reliability, all repairs should be performed by an authorised service centre.

LUBRICATION

All of the bearings in the product are lubricated with a sufficient amount of high grade lubricant for the life span of the product under normal operating conditions. Therefore, no further lubrication is required.

ENVIRONMENTAL PROTECTION



Recycle raw materials instead of disposing of as waste. The machine, accessories, and packaging should be sorted for environment-friendly recycling.

SYMBOLS ON THE PRODUCT



Safety alert

n_o No-load speed

V Volts

Direct current

min^{-1} Revolutions or reciprocations per minute



Wood



Do not cut metals



Wear eye protection



Danger! Sharp blade



Do not expose to rain



Width of cut



Blade teeth



Regulatory Compliance Mark (RCM). Product meets applicable regulatory requirements.



Please read the instructions carefully before starting the machine.



Waste electrical products should not be disposed of with household waste. Please recycle where facilities exist. Check with your local authority or retailer for recycling advice.

SYMBOLS IN THIS MANUAL



Note



Waiting time



Parts or accessories sold separately

The following signal words and meanings are intended to explain the levels of risk associated with this product:

⚠ DANGER

Indicates an imminently hazardous situation, which, if not avoided, will result in death or serious injury.

⚠ WARNING

Indicates a potentially hazardous situation, which, if not avoided, could result in death or serious injury.

⚠ CAUTION

Indicates a potentially hazardous situation, which, if not avoided, may result in minor or moderate injury.

CAUTION

(Without Safety Alert Symbol) Indicates a situation that may result in property damage.

KNOW YOUR PRODUCT

1. Edge guide knob
2. Bevel adjustment knob
3. Spindle lock button
4. Front handle
5. Lock-off button
6. Switch trigger
7. Battery port
8. Dust Pipe joint
9. Inner flange
10. Outer flange
11. Blade Screw
12. Hex key
13. Depth adjustment lock lever
14. Edge guide fence
15. Blade
16. Handle, insulated gripping surface

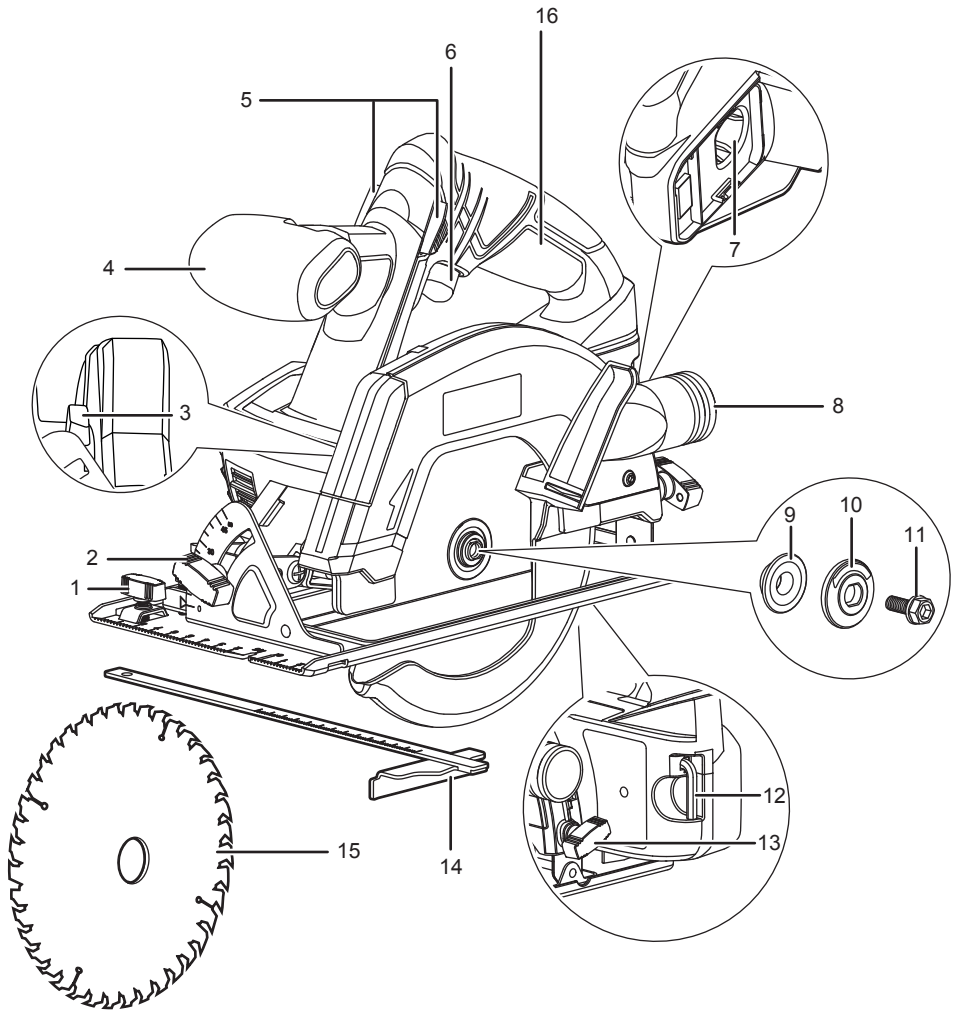

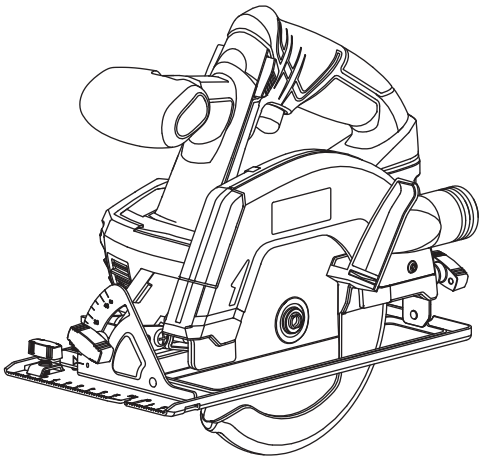

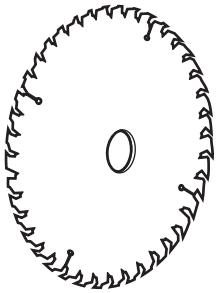

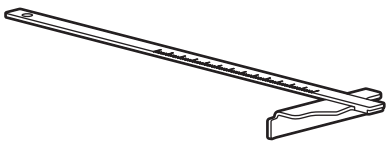



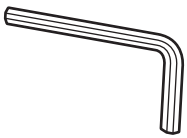



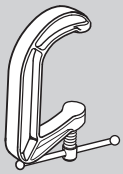

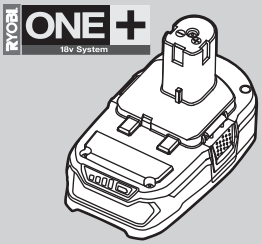
RYOBI
ONE+
18v System

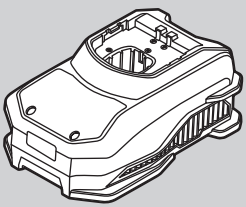

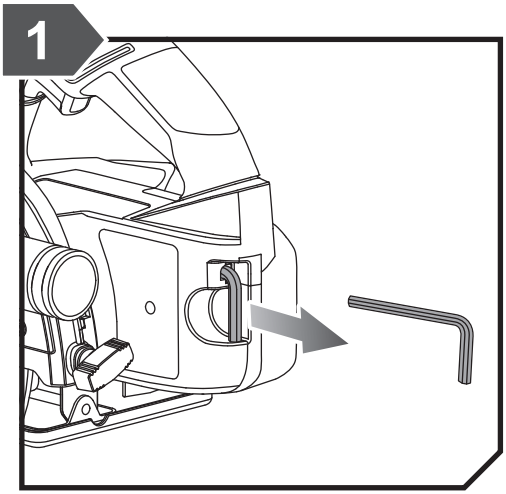
1

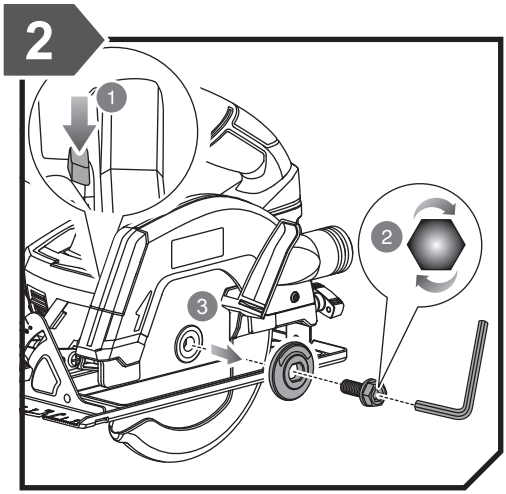
2
1
2
3

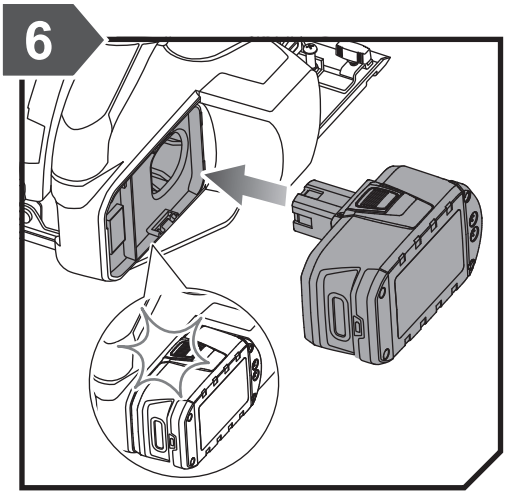
6

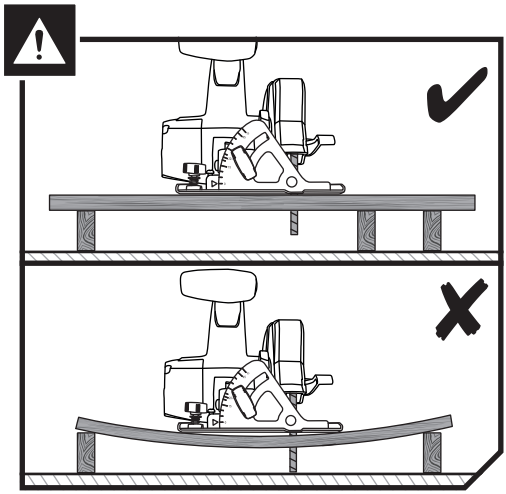

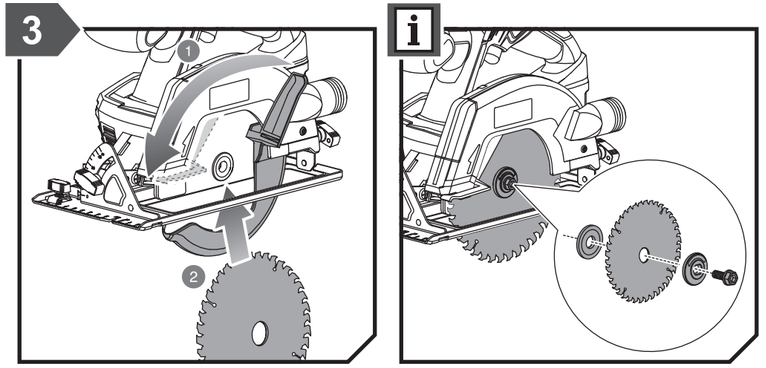
3
1
2

i

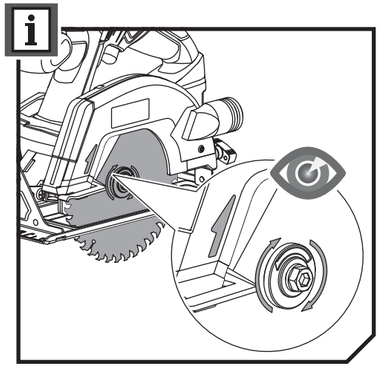
i

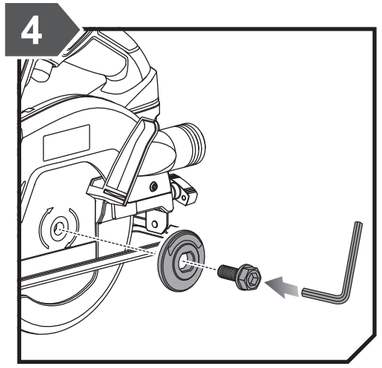
4

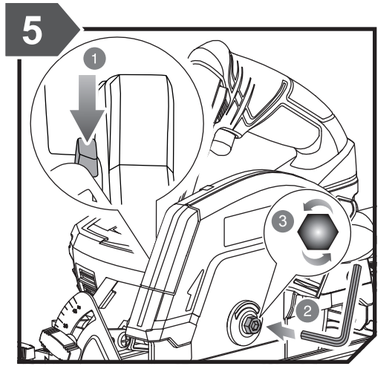
5
1
3
2

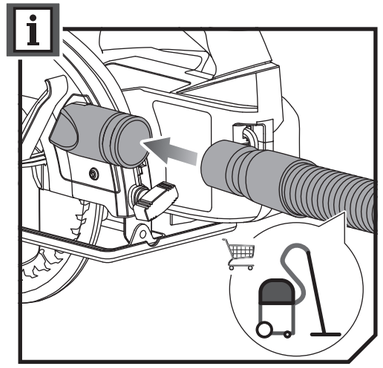
i

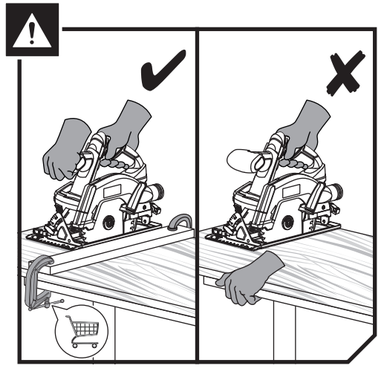

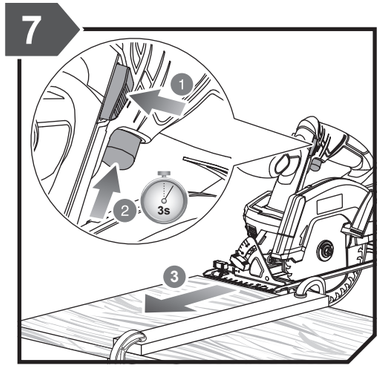
7
1
2
3s
3

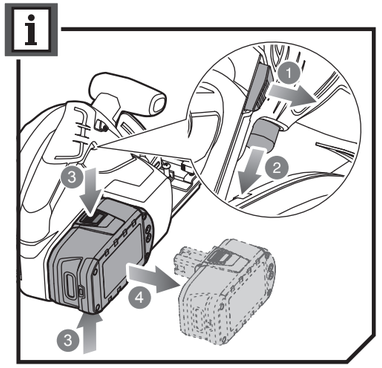
i
1
2
3
4
3

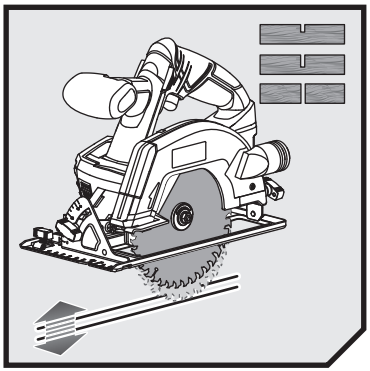

1

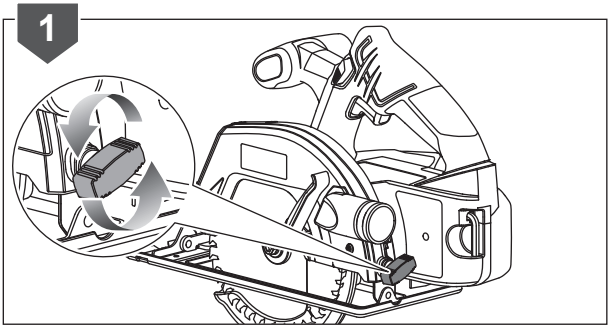

2

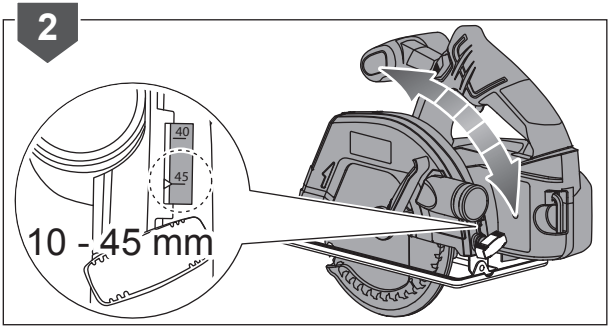

3

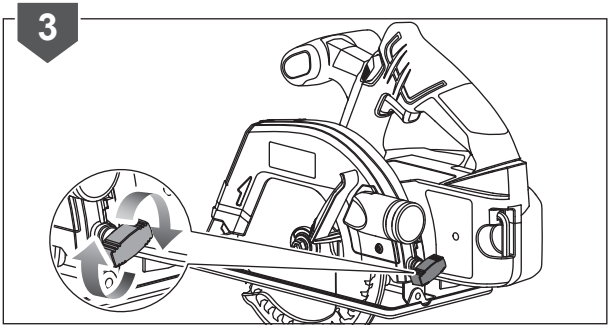

i

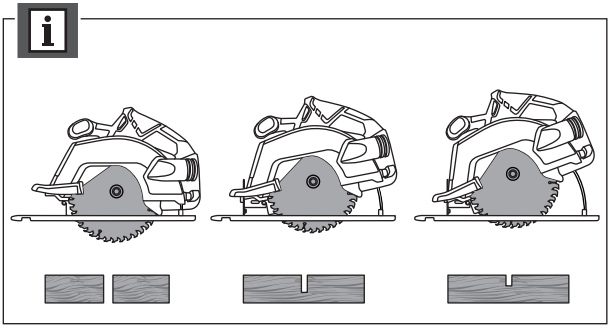

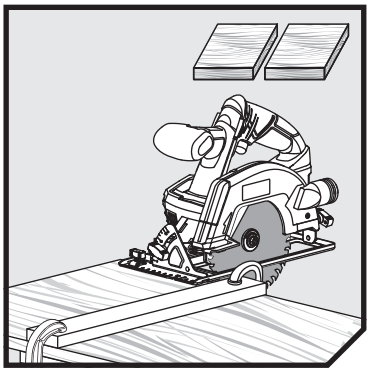

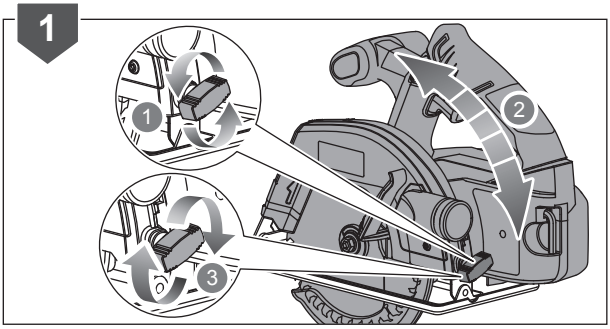
1
1
2
3

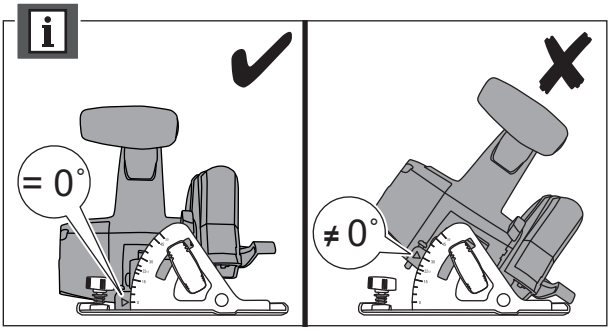
= 0°
≠ 0°

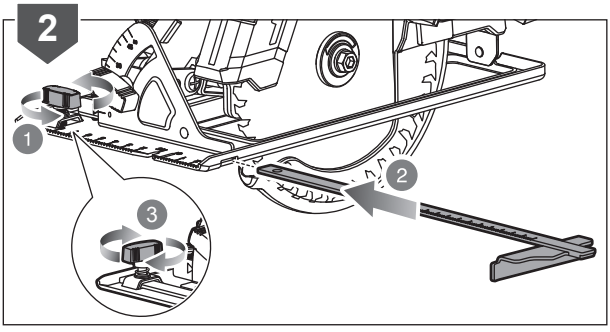
2
1
2
3

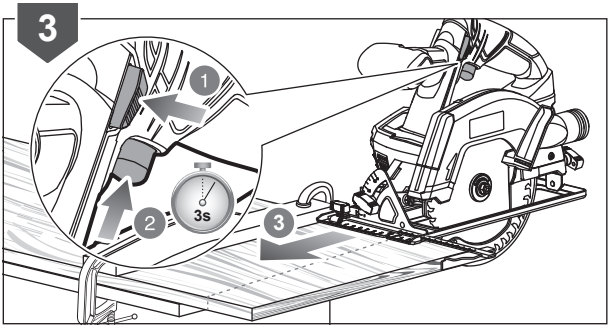
3
1
2
3s
3

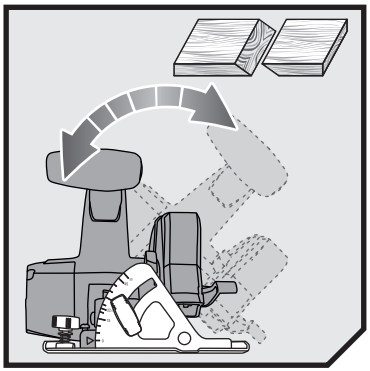

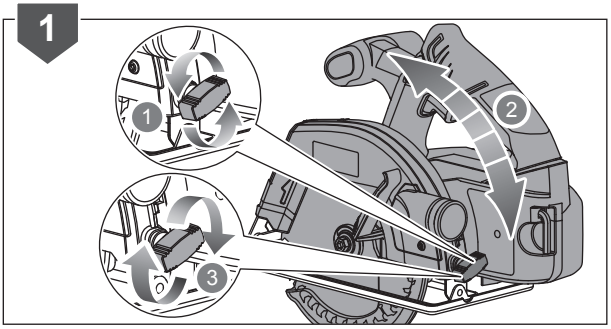
1
1
2
3

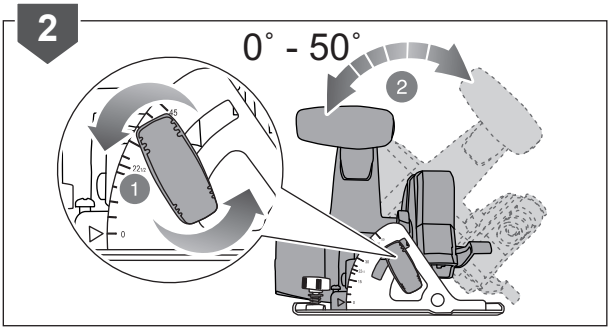
2
0˚ - 50˚
2
1

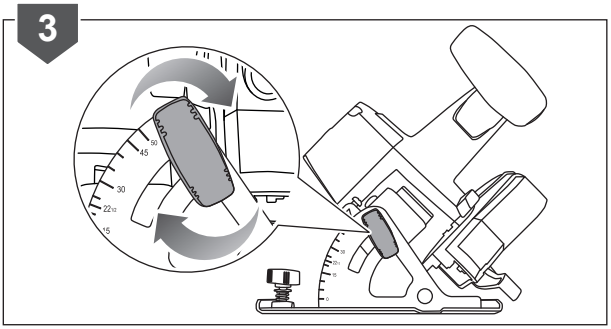
3

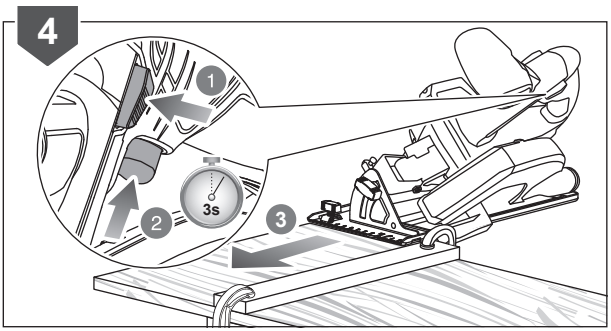
4
1
2
3s
3

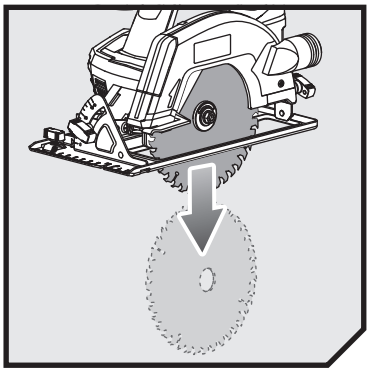

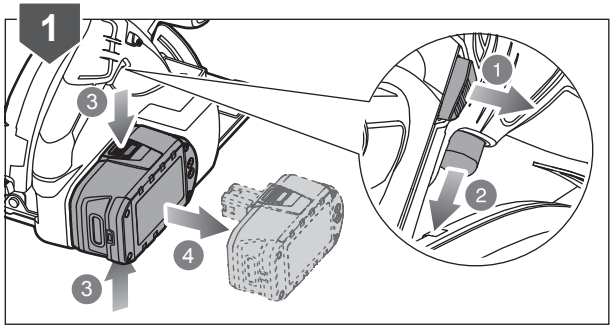

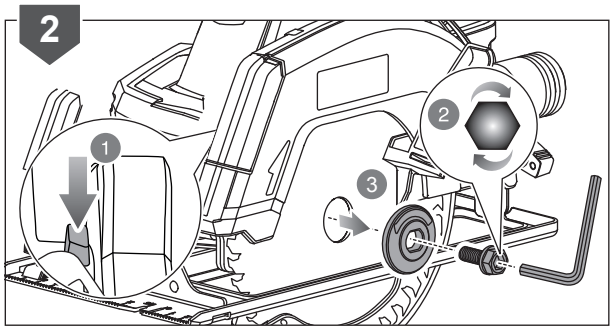

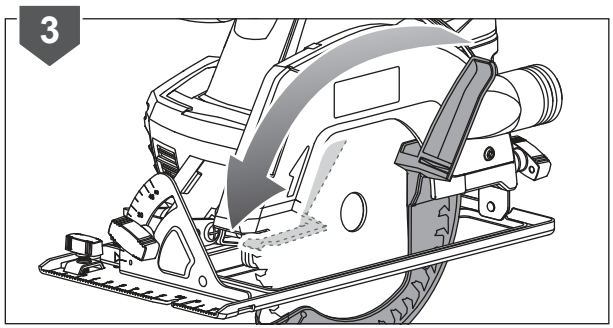

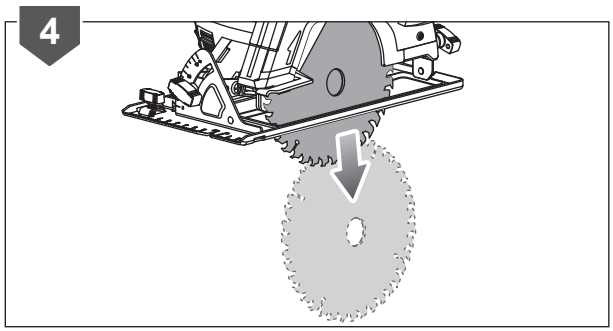

20190823v2

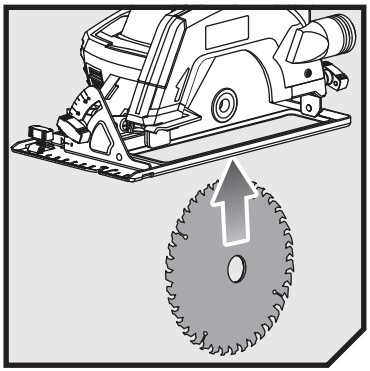

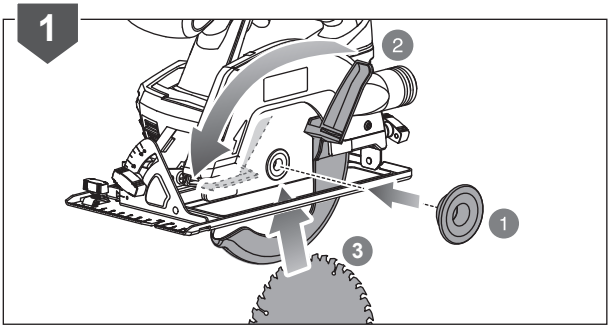
1
2
1
3

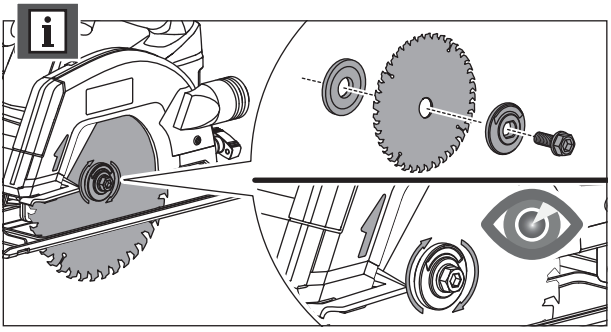
i

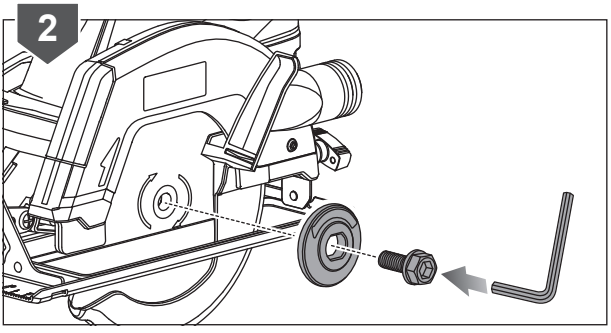
2

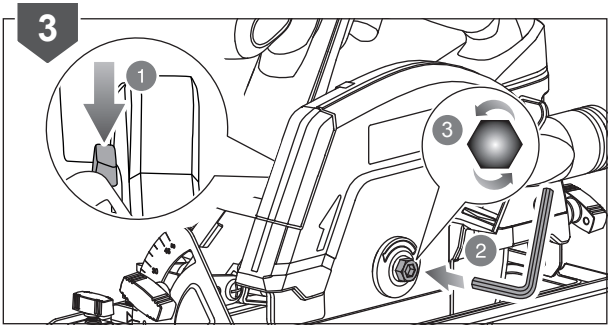
3
1
3
2

PRODUCT SPECIFICATIONS

Cordless circular saw	
Model	R18CSP
Voltage	18 V ⎓
Blade diameter	150 mm
Blade arbor	10 mm
Cutting capacity at 0º	45 mm
Cutting capacity at 45º	32 mm
No-load speed	4700 min^{-1}
Blade - width of cut	1.5 mm
Blade teeth	18 T
Blade thickness	1.0 mm
Weight - not incl. battery pack	2.16 kg
Weight (According to EPTA procedure 01/2014)	2.8 kg (1.3Ah) - 3.6 kg (9.0Ah)
Measured sound values determined according to EN 62841:	
A-weighted sound pressure level	L_{pA} = 89.5 dB(A)
Uncertainty K	3 dB (A)
A-weighted sound power level	L_{WA} = 100.5 dB(A)
Uncertainty K	3 dB (A)
Wear ear protectors.	
The vibration total values (triaxial vector sum) determined according to EN 62841:	
Cutting wood	$a_{h,W} \leq 2.5$ m/s^2
Uncertainty K	1.5 m/s^2

BATTERY AND CHARGER

Model	Compatible battery pack (not included)	Compatible charger (not included)
Lithium-Ion	RB18L13	BCS618G
	RB18L15	BCL14181H
	RB18L20	BCL14183H
	RB18L25	BCL1418IV*
	RB18L40	RC18150U
	RB18L50	RC18627U
	RB18L60A	RC18120
	RB18L90A	RC18115

* for vehicles with 12V DC outlets

VIBRATION LEVEL

WARNING

The vibration emission level given in this information sheet has been measured in accordance with a standardised test given in EN 62841 and may be used to compare one tool with another. It may be used for a preliminary assessment of exposure. The declared vibration emission level represents the main applications of the tool. However if the tool is used for different applications, with different accessories or poorly maintained, the vibration emission may differ. This may significantly increase the exposure level over the total working period.

An estimation of the level of exposure to vibration should also take into account the times when the tool is switched off or when it is running but not actually doing the job. This may significantly reduce the exposure level over the total working period. Identify additional safety measures to protect the operator from the effects of vibration such as: maintain the tool and the accessories, keep the hands warm and organisation of work patterns.



RYOBI is a trademark of Ryobi Limited, and is used under license.

Imported by:

Techtronic Industries Australia Pty Ltd
31 Gilby Road, Mount Waverley, VIC 3149,
Melbourne, Australia

Techtronic Industries N.Z. Limited
Unit C, 70 Business Parade South,
Highbrook, Auckland 2013, New Zealand

961075394-02