ORIGINAL INSTRUCTIONS

18V Palm Sander

R18PS



Important!

It is essential that you read the instructions in this manual before assembling, operating and maintaining the product.

Subject to technical modifications.

Safety, performance, and dependability have been given top priority in the design of your palm sander.

INTENDED USE

The palm sander is intended to be used only by adults who have read and understood the instructions and warnings in this manual, and can be considered responsible for their actions.

The product is intended for sanding and finishing metal, wood, plastic or similar materials using the abrasive pads or sheets provided.

The product should only be used in well ventilated areas.

This product is designed for dry sanding only. Do not use for wet sanding.

The product is intended for consumer use only. Do not use the product for any other purpose.

⚠ WARNING

Read all safety warnings, instructions, illustrations and specifications provided with this power tool. Failure to follow all instructions listed below may result in electric shock, fire and/or serious injury.

Save all warnings and instructions for future reference.

The term "power tool'' in the warnings refers to your mains-operated (corded) power tool or battery-operated (cordless) power tool.

WORK AREA SAFETY

- **Keep work area clean and well lit.** Cluttered or dark areas invite accidents.
- **Do not operate power tools in explosive atmospheres, such as in the presence of flammable liquids, gases or dust.** Power tools create sparks which may ignite the dust or fumes.
- **Keep children and bystanders away while operating a power tool.** Distractions can cause you to lose control.

ELECTRICAL SAFETY

- **Power tool plugs must match the outlet. Never modify the plug in any way. Do not use any adapter plugs with earthed (grounded) power tools.** Unmodified plugs and matching outlets will reduce risk of electric shock.
- **Avoid body contact with earthed or grounded surfaces, such as pipes, radiators, ranges and refrigerators.** There is an increased risk of electric shock if your body is earthed or grounded.
- **Do not expose power tools to rain or wet conditions.** Water entering a power tool will increase the risk of electric shock.
- **Do not abuse the cord. Never use the cord for carrying, pulling or unplugging the power tool. Keep cord away from heat, oil, sharp edges or moving parts.** Damaged or entangled cords increase the risk of electric shock.
- **When operating a power tool outdoors, use an extension cord suitable for outdoor use.** Use of a cord suitable for outdoor use reduces the risk of electric shock.
- **If operating a power tool in a damp location is unavoidable, use a residual current device (RCD) protected supply.** Use of an RCD reduces the risk of electric shock.

PERSONAL SAFETY

- **Stay alert, watch what you are doing and use common sense when operating a power tool. Do not use a power tool while you are tired or under the influence of drugs, alcohol or medication.** A moment of inattention while operating power tools may result in serious personal injury.
- **Use personal protective equipment. Always wear eye protection.** Protective equipment such as dust mask, non-skid safety shoes, hard hat or hearing protection used for appropriate conditions will reduce personal injuries.
- **Prevent unintentional starting. Ensure the switch is in the off-position before connecting to power source and/or battery pack, picking up or carrying the tool.** Carrying power tools with your finger on the switch or energising power tools that have the switch on invites accidents.
- **Remove any adjusting key or wrench before turning the power tool on.** A wrench or a key left attached to a rotating part of the power tool may result in personal injury.
- **Do not overreach. Keep proper footing and balance at all times.** This enables better control of the power tool in unexpected situations.
- **Dress properly. Do not wear loose clothing or jewellery. Keep your hair and clothing away from moving parts.** Loose clothes, jewellery or long hair can be caught in moving parts.
- **If devices are provided for the connection of dust extraction and collection facilities, ensure these are connected and properly used.** Use of dust collection can reduce dust-related hazards.
- **Do not let familiarity gained from frequent use of tools allow you to become complacent and ignore tool safety principles.** A careless action can cause severe injury within a fraction of a second.

POWER TOOL USE AND CARE

- **Do not force the power tool. Use the correct power tool for your application.** The correct power tool will do the job better and safer at the rate for which it was designed.
- **Do not use the power tool if the switch does not turn it on and off.** Any power tool that cannot be controlled with the switch is dangerous and must be repaired.

- **Disconnect the plug from the power source and/ or remove the battery pack, if detachable, from the power tool before making any adjustments, changing accessories, or storing power tools.** Such preventive safety measures reduce the risk of starting the power tool accidentally.
- **Store idle power tools out of the reach of children and do not allow persons unfamiliar with the power tool or these instructions to operate the power tool.** Power tools are dangerous in the hands of untrained users.
- **Maintain power tools and accessories. Check for misalignment or binding of moving parts, breakage of parts and any other condition that may affect the power tool's operation. If damaged, have the power tool repaired before use.** Many accidents are caused by poorly maintained power tools.
- **Keep cutting tools sharp and clean.** Properly maintained cutting tools with sharp cutting edges are less likely to bind and are easier to control.
- **Use the power tool, accessories and tool bits etc. in accordance with these instructions, taking into account the working conditions and the work to be performed.** Use of the power tool for operations different from those intended could result in a hazardous situation.
- **Keep handles and grasping surfaces dry, clean and free from oil and grease.** Slippery handles and grasping surfaces do not allow for safe handling and control of the tool in unexpected situations.

BATTERY TOOL USE AND CARE

- **Recharge only with the charger specified by the manufacturer.** A charger that is suitable for one type of battery pack may create a risk of fire when used with another battery pack.
- **Use power tools only with specifically designated battery packs.** Use of any other battery packs may create a risk of injury and fire.
- **When battery pack is not in use, keep it away from other metal objects, like paper clips, coins, keys, nails, screws or other small metal objects, that can make a connection from one terminal to another.** Shorting the battery terminals together may cause burns or a fire.
- **Under abusive conditions, liquid may be ejected from the battery; avoid contact. If contact accidentally occurs, flush with water. If liquid contacts eyes, additionally seek medical help.** Liquid ejected from the battery may cause irritation or burns.
- **Do not use a battery pack or tool that is damaged or modified.** Damaged or modified batteries may exhibit unpredictable behaviour resulting in fire, explosion or risk of injury.
- **Do not expose a battery pack or tool to fire or excessive temperature.** Exposure to fire or temperature above 130°C may cause explosion.
- **Follow all charging instructions and do not charge the battery pack or tool outside the temperature range specified in the instructions.** Charging improperly or at temperatures outside the specified range may damage the battery and increase the risk of fire.

SERVICE

- **Have your power tool serviced by a qualified repair person using only identical replacement parts.** This will ensure that the safety of the power tool is maintained.
- **Never service damaged battery packs.** Service of battery packs should only be performed by the manufacturer or authorized service providers.

SANDER SAFETY WARNINGS

- **Always wear safety goggles and a dust mask when sanding, especially sanding overhead.**
- **A suitable breathing respirator must be worn while sanding lead paint, some woods and metal to avoid breathing the harmful/toxic dust or air.** Contact with or inhalation of dust produced from these materials can endanger the health of operator and bystanders.
- **Do not throw sanding dust on an open fire** because materials in fine particle form may be explosive.
- **Do not use the product for wet sanding.**
- **Do not use sanding paper larger than needed.** Extra paper extending beyond the sanding pad can also cause serious lacerations.
- When not in use, all tools should be disconnected from power source.
- Caution, fire hazard! Avoid overheating the object being sanded as well as the sander. Always empty the dust collector before taking breaks.
- Protect the battery against heat (e.g., continuous intense sunlight and fire), water, and moisture.
- Properly dispose of dropped or damaged battery immediately.
- **Clamp workpiece with a clamping device.** Unclamped workpieces can cause severe injury and damage. Do not hold the material you are sanding by hand.
- Do not apply excessive pressure to the product.
- Ambient temperature range for tool during operation is between 0°C and 40°C.
- Ambient temperature range for tool storage is between 0°C and 40°C.
- The recommended ambient temperature range for the charging system during charging is between 10°C and 38°C.

ADDITIONAL BATTERY SAFETY WARNINGS

⚠ WARNING

To reduce the risk of fire, personal injury, and product damage due to a short circuit, never immerse your tool, battery pack or charger in fluid or allow a fluid to flow inside them. Corrosive or conductive fluids, such as seawater, certain industrial chemicals, and bleach or bleach-containing products, etc., can cause a short circuit.

- Ambient temperature range for battery during use is between 0°C and 40°C.
- Ambient temperature range for battery storage is between 0°C and 20°C.

TRANSPORTING LITHIUM BATTERIES

Transport the battery in accordance with local and national provisions and regulations.

Follow all special requirements on packaging and labelling when transporting batteries by a third party. Ensure that no batteries can come in contact with other batteries or conductive materials while in transport by protecting exposed connectors with insulating, non-conductive caps or tape. Do not transport batteries that are cracked or leaking. Check with the forwarding company for further advice.

RESIDUAL RISKS

Even when the product is used as prescribed, it is still impossible to completely eliminate certain residual risk factors. The following hazards may arise and the operator should pay special attention to avoid the following:

- Injury caused by dust

  NOTE: Using the product will produce considerable amount of dust and fine particles. Use the dust collection device or connect a dust extraction vacuum when operating the product. Wear dust masks containing filters appropriate to the materials being worked on. Ensure adequate workplace ventilation. Do not eat, drink, or smoke in the work area.
- Injury caused by noise and vibration

  NOTE: Wear ear protection during the sanding operation. Do not operate the product for long periods of time. See “Risk reduction”.

RISK REDUCTION

It has been reported that vibrations from handheld tools may contribute to a condition called Raynaud’s Syndrome in certain individuals. Symptoms may include tingling, numbness and blanching of the fingers, usually apparent upon exposure to cold. Hereditary factors, exposure to cold and dampness, diet, smoking and work practices are all thought to contribute to the development of these symptoms. There are measures that can be taken by the operator to possibly reduce the effects of vibration:

- Keep your body warm in cold weather. When operating the unit wear gloves to keep the hands and wrists warm. It is reported that cold weather is a major factor contributing to Raynaud’s Syndrome.
- After each period of operation, exercise to increase blood circulation.
- Take frequent work breaks. Limit the amount of exposure per day.

If you experience any of the symptoms of this condition, immediately discontinue use and see your doctor about these symptoms.

⚠ WARNING

Injuries may be caused, or aggravated, by prolonged use of a tool. When using any tool for prolonged periods, ensure you take regular breaks.

KNOW YOUR PRODUCT

See page 5.

1. Battery port
2. Vacuum adaptor
3. Dust port
4. Quick change hook-and-loop pad
5. Insulated grasping surface
6. Off switch
7. On switch
8. Sandpaper

MAINTENANCE

⚠ WARNING

The product should never be connected to a power supply when assembling parts, making adjustments, cleaning, performing maintenance, or when the product is not in use. Disconnecting the product from the power supply will prevent accidental starting that could cause serious injury.

⚠ WARNING

When servicing, use only original manufacturer’s replacement parts, accessories and attachments. Use of any other parts may create a hazard or cause product damage.

- Avoid using solvents when cleaning plastic parts. Most plastics are susceptible to various types of commercial solvents and may be damaged by their use. Use clean cloths to remove dirt, carbon dust, etc.

⚠ WARNING

Do not at any time let brake fluids, gasoline, petroleum-based products, penetrating oils, etc., come in contact with plastic parts. Chemicals can damage, weaken or destroy plastic which may result in serious personal injury.

⚠ WARNING

For greater safety and reliability, all repairs should be performed by an authorised service centre.

BATTERY OVERLOAD PROTECTION

This tool is designed to protect the battery from overloading. When overloading is detected, the tool will automatically switch off. To resume operation, switch the tool off and on again. If the tool fails to operate, it means battery pack is discharged and should be recharged in a compatible charger.

ENVIRONMENTAL PROTECTION



Recycle raw materials instead of disposing of as waste. The machine, accessories and packaging should be sorted for environmental-friendly recycling.

SYMBOLS



Safety alert



CE conformity



EurAsian Conformity Mark



Ukrainian mark of conformity

n_o No-load speed

I On

O Off



Please read the instructions carefully before starting the machine.



Waste electrical products should not be disposed of with household waste. Please recycle where facilities exist. Check with your local authority or retailer for recycling advice.

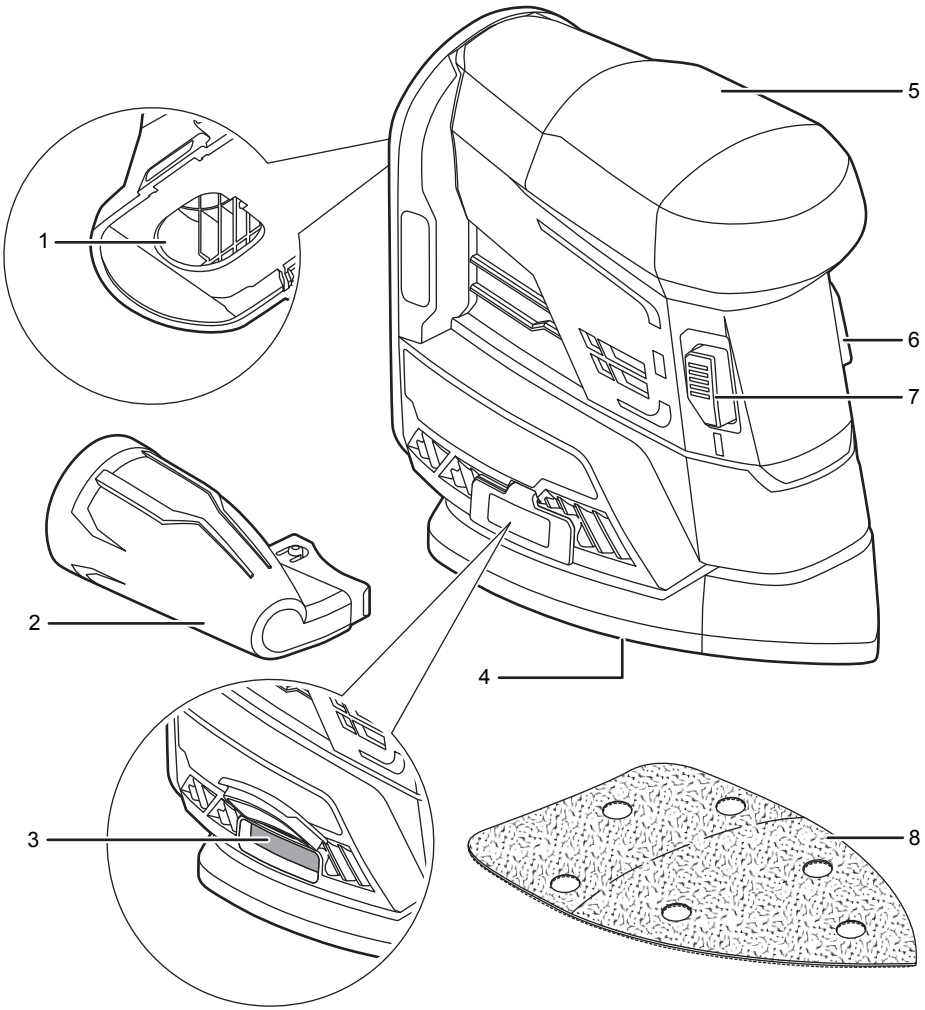
1
2
3
4
5
6
7
8

1

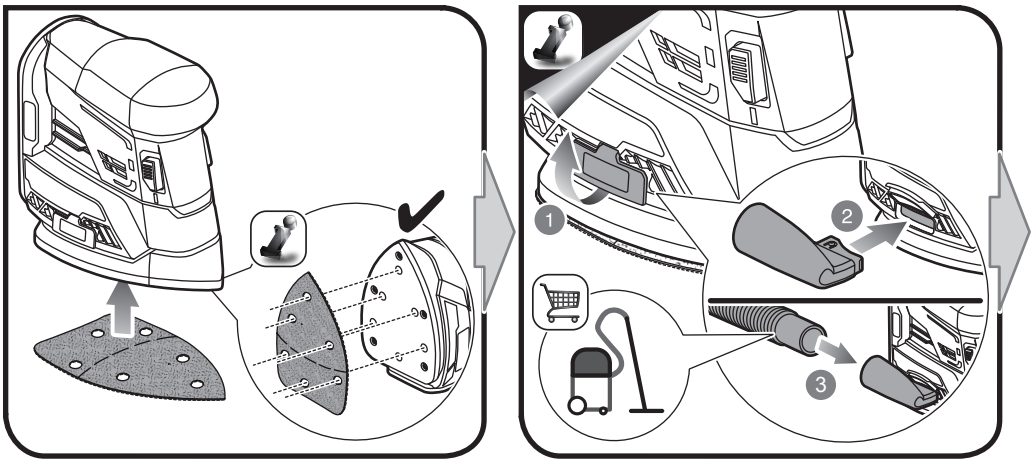

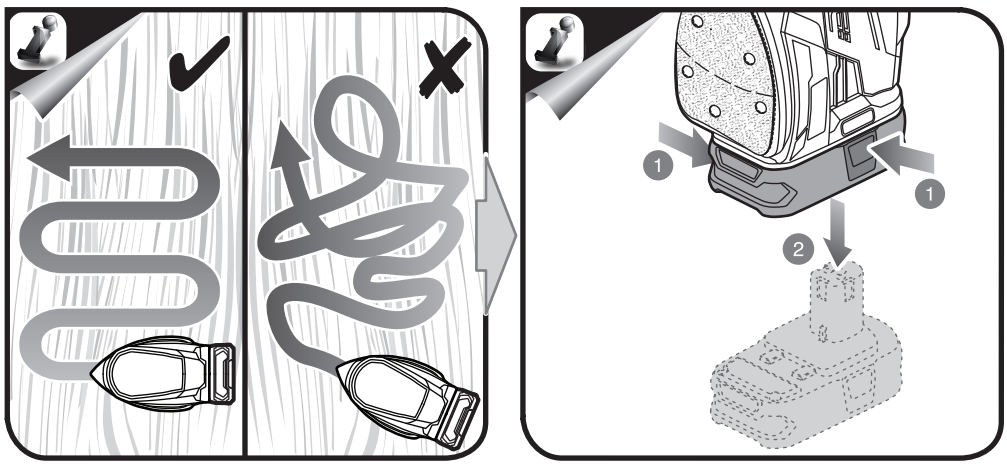

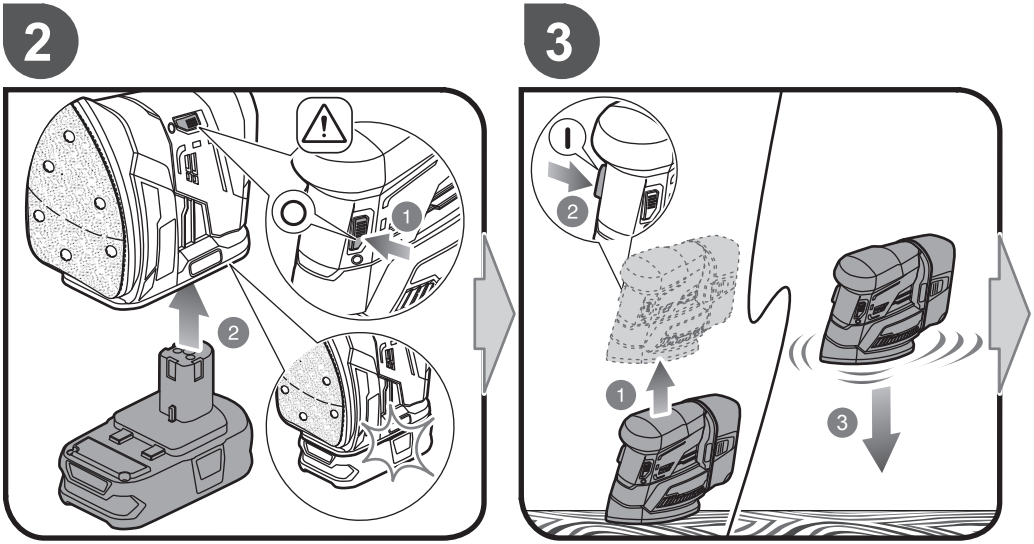
2
3
1
2
1
2
3

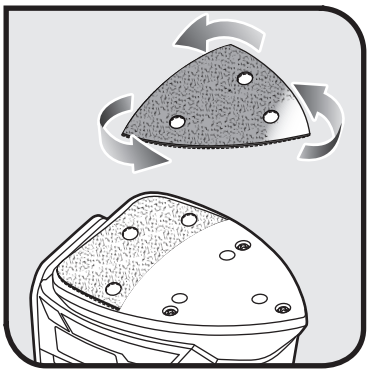

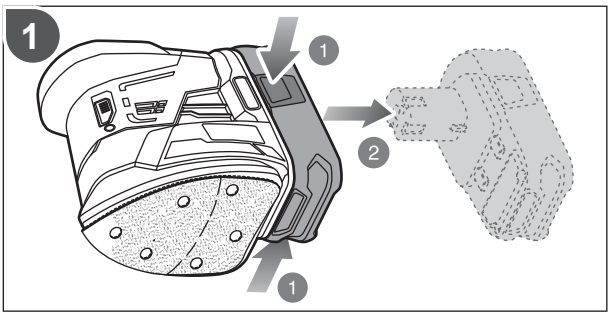

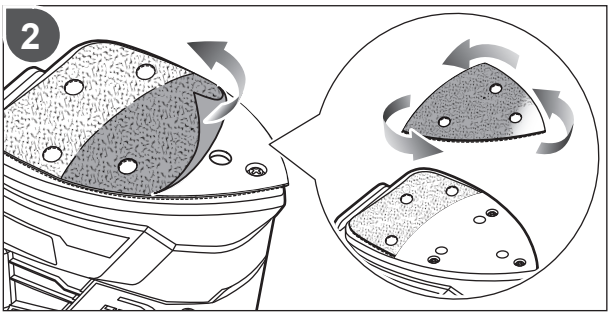

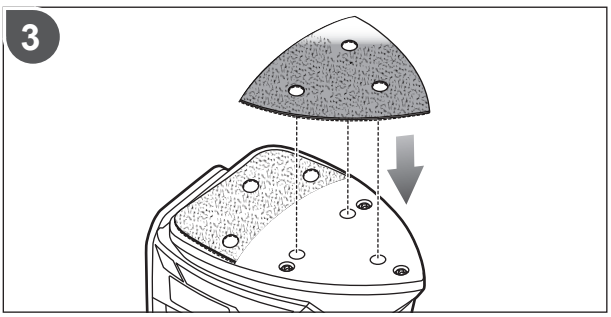

20190122v4

PRODUCT SPECIFICATIONS

18V Palm Sander	
Voltage	18 V ⎓
No load speed	11000 min^{-1}
No load orbital stroke rate	22000 min^{-1}
Sanding sheet surface	99.2 cm^2
Orbital diameter	1.8 mm
Weight (According to EPTA procedure 01/2014)	1.1 kg (1.5Ah) - 1.8 kg (9.0Ah)
Weight - not incl. battery pack	0.6 kg

Measured sound values determined according to EN 62841:

A-weighted sound pressure level	L_{pA} = 77.8 dB(A)
Uncertainty K	3 dB(A)
A-weighted sound power level	L_{WA} = 88.8 dB(A)
Uncertainty K	3 dB(A)
Wear ear protectors.	

The vibration total values (triaxial vector sum) determined according to EN 62841:

Vibration emission value	a_h = 10.3 m/s^2
Uncertainty K	1.5 m/s^2

BATTERY AND CHARGER

Model	Compatible battery pack (not included)	Compatible charger (not included)
Lithium-ion	RB18L13 RB18L15 RB18L20 RB18L25 RB18L30 RB18L40 RB18L50 RB18L90	BCL14181H BCL14183H RC18150 RC18627 RC18115 RC18120 RC18118C

VIBRATION LEVEL

WARNING

The vibration emission level given in this information sheet has been measured in accordance with a standardised test given in EN 62841 and may be used to compare one tool with another. It may be used for a preliminary assessment of exposure. The declared vibration emission level represents the main applications of the tool. However if the tool is used for different applications, with different accessories or poorly maintained, the vibration emission may differ. This may significantly increase the exposure level over the total working period.

An estimation of the level of exposure to vibration should also take into account the times when the tool is switched off or when it is running but not actually doing the job. This may significantly reduce the exposure level over the total working period. Identify additional safety measures to protect the operator from the effects of vibration such as: maintain the tool and the accessories, keep the hands warm and organisation of work patterns.

RYOBI® WARRANTY APPLICATION CONDITIONS

In addition to any statutory rights resulting from the purchase, this product is covered by a warranty as stated below.

1. The warranty period is 24 months for consumers and commences on the date the product was purchased. This date has to be documented by an invoice or other proof of purchase. The product is designed and dedicated to consumer and private use only. So there is no warranty provided in case of professional or commercial use. This warranty applies only on new products.
2. There is a possibility to extend for a part of the range of power tools (AC/DC) the warranty period over the period described above using the registration on the www.ryobitools.eu website. The eligibility of products for extended warranty is clearly displayed in stores and / or on packaging and is contained within the product documentation. The end user is required to register his/her newly-acquired products online within 30 days from the date of purchase. The end user may register for the extended warranty in his/her country of residence if listed on the online registration form where this option is valid. Furthermore, end users must give their consent to the storage of their personal data that is required to be entered online. They must also accept the terms and conditions. The registration confirmation receipt, which is sent out by e-mail, and the original invoice showing the date of purchase will serve as proof of the extended warranty.
3. The warranty covers all defects of the product during the warranty period due to faults in workmanship or material at the purchase date. The warranty is limited to repair and/or replacement and does not include any other obligations including but not limited to incidental or consequential damages. The warranty is not valid if the product has been misused, used contrary to the instruction manual, or has been incorrectly connected to a power supply. This warranty does not apply to:
   - any damage to the product that is the result of improper or lack of maintenance
   - any product that has been altered or modified
   - any product where original identification (trade mark, serial number) markings have been defaced, altered or removed
   - any damage caused by non-observance of the instruction manual
   - any product not displaying the CE approval mark on the rating plate
   - any product that has been attempted to be repaired by a non-authorised warranty service centre or without prior authorisation by Techtronic Industries
   - any product connected to an improper power supply (amps, voltage, frequency)
   - any damage caused by external influences (water, chemical, physical, shocks) or foreign substances
   - normal wear and tear spare parts
   - inappropriate use, overloading of the tool
   - use of non-approved accessories or parts
   - Power tool accessories provided with the tool or purchased separately. including but not limited to screw driver bits, drill bits, abrasive discs, sand paper and blades, lateral guide etc.
   - Components (parts and accessories) subject to natural wear and tear, including but not limited to Service & Maintenance Kits, carbon brushes, bearings, chuck, SDS drill bit attachment or reception, power cord, auxiliary handle, transport carry case, sanding plate, dust bag, dust exhaust tube, felt washers, impact wrench pins & springs, etc.
4. For servicing, the product must be sent or presented to a RYOBI authorised service station listed for each country in the following list of service station addresses. In some countries your local RYOBI dealer undertakes to send the product to the RYOBI service organisation. When sending a product to a RYOBI service station, the product should be safely packed without any dangerous contents such as petrol, marked with sender's address and accompanied by a short description of the fault.
5. A repair / replacement under this warranty is free of charge. It does not constitute an extension or a new start of the warranty period. Exchanged parts or products become our property. In some countries delivery charges or postage will have to be paid by the sender. Your statutory rights arising from the purchase of the product remain unaffected.
6. This warranty is valid in the European Community, Switzerland, Iceland, Norway, Liechtenstein, Turkey and Russia. Outside these areas, please contact your authorised RYOBI dealer to determine if another warranty applies.

AUTHORISED SERVICE CENTRES

ACD PLANT LTD
145 Southbank Road
Coundon
Coventry, West Midlands
CV6 1FG
Phone: 02476 594348
Email: danmcgunigle@acdplant.co.uk
Web: www.acdplant.co.uk

CBS Power Tools Limited
Unit 4, V P Square
Storeys Bar Rd, Fengate
Peterborough, Cambridgeshire
PE1 5YS
Phone: 01733 343031
Email: steve@cbspowertools.co.uk
Web: www.cbspowertools.com

C D Powertools
76 Old Road
Churwell Morley, Leeds
LS27 7TH
Phone: 0113 2718494
Email: info@cdpowertools.co.uk
Web : www.cdpowertools.co.uk

C J Sinclair Limited
44 Victoria Road
St Peters
Broadstairs, Kent
CT10 2UG
Phone: 01843 869400
Email: repairs@cjsinclairltd.co.uk
Web: www.cjsinclairltd.co.uk

Powertech Ind Ltd
Unit 2C, Ellison Road
Norwood Ind, Killamarsh
Sheffield, South Yorkshire
S21 2JG
Phone: 01142 474080
Email: stores@powertech-industrial.co.uk
Web: www.powertech-industrial.co.uk

RYCKO Technical Services LTD
104 Green Lane
St Albans, Herts
AL3 6EX
Phone: 08458 678790
Email: info@ryckotechnical.com
Web: www.ryckotechnical.com

ToolTech Industrial Equipment
227 E Dunhill Road, Macosquin
Coleraine, Co Londonderry
BT514LQ
Phone: 028 70359493
Email: john@tooltech.org.uk

For an updated list of authorised service centres, visit http://uk.ryobitools.eu/header/service-and-support/service-agents.

DECLARATION OF CONFORMITY

Techtronic Industries GmbH
Max-Eyth-Straße 10, 71364 Winnenden, Germany

Herewith we declare that the product

18V Palm Sander
Brand: RYOBI
Model number: R18PS
Serial number range: 44443903000001 - 44443903999999

is in conformity with the following European Directives and harmonised standards

2011/65/EU, 2006/42/EC, 2014/30/EU,
EN 62841-1:2015, EN 62841-2-4:2014,
EN 55014-1:2017, EN 55014-2:2015

RoHS documentation is compiled according to EN 50581:2012

CE

Todd Chipner
Sr. Director, Regulatory & Safety
Winnenden, Oct. 30, 2018

Authorised to compile the technical file:
Alexander Krug, Managing Director
Techtronic Industries GmbH
Max-Eyth-Straße 10, 71364 Winnenden, Germany



RYOBI is a trademark of Ryobi Limited,
and is used under license.

Techtronic Industries GmbH
Max-Eyth-Straße 10,
71364 Winnenden, Germany

20190122v4