ORIGINAL INSTRUCTIONS

Percussion Drill

R18PD3



Important!

It is essential that you read the instructions in this manual before assembling, operating, and maintaining the product.

Subject to technical modification.

Safety, performance, and dependability have been given top priority in the design of your percussion drill.

INTENDED USE

The percussion drill is intended to be used only by adults who have read and understood the instructions and warnings in this manual and can be considered responsible for their actions.

The percussion drill can be used for drilling into various material including wood, metal and plastics using a drill bit which has a shank diameter of less that 13 mm. It can also be used in hammer mode for drilling masonry and similar materials.

Do not use the percussion drill for any other purpose not described above.

GENERAL POWER TOOL SAFETY WARNINGS

⚠ WARNING

Read all safety warnings, instructions, illustrations and specifications provided with this power tool. Failure to follow all instructions listed below may result in electric shock, fire and/or serious injury.

Save all warnings and instructions for future reference.

The term "power tool'' in the warnings refers to your mains-operated (corded) power tool or battery-operated (cordless) power tool.

WORK AREA SAFETY

- **Keep work area clean and well lit.** Cluttered or dark areas invite accidents.
- **Do not operate power tools in explosive atmospheres, such as in the presence of flammable liquids, gases or dust.** Power tools create sparks which may ignite the dust or fumes.
- **Keep children and bystanders away while operating a power tool.** Distractions can cause you to lose control.

ELECTRICAL SAFETY

- **Power tool plugs must match the outlet. Never modify the plug in any way. Do not use any adapter plugs with earthed (grounded) power tools.** Unmodified plugs and matching outlets will reduce risk of electric shock.
- **Avoid body contact with earthed or grounded surfaces, such as pipes, radiators, ranges and refrigerators.** There is an increased risk of electric shock if your body is earthed or grounded.
- **Do not expose power tools to rain or wet conditions.** Water entering a power tool will increase the risk of electric shock.
- **Do not abuse the cord. Never use the cord for carrying, pulling or unplugging the power tool. Keep cord away from heat, oil, sharp edges or moving parts.** Damaged or entangled cords increase the risk of electric shock.
- **When operating a power tool outdoors, use an extension cord suitable for outdoor use.** Use of a cord suitable for outdoor use reduces the risk of electric shock.
- **If operating a power tool in a damp location is unavoidable, use a residual current device (RCD) protected supply.** Use of an RCD reduces the risk of electric shock.

PERSONAL SAFETY

- **Stay alert, watch what you are doing and use common sense when operating a power tool. Do not use a power tool while you are tired or under the influence of drugs, alcohol or medication.** A moment of inattention while operating power tools may result in serious personal injury.
- **Use personal protective equipment. Always wear eye protection.** Protective equipment such as dust mask, non-skid safety shoes, hard hat or hearing protection used for appropriate conditions will reduce personal injuries.
- **Prevent unintentional starting. Ensure the switch is in the off-position before connecting to power source and/or battery pack, picking up or carrying the tool.** Carrying power tools with your finger on the switch or energising power tools that have the switch on invites accidents.
- **Remove any adjusting key or wrench before turning the power tool on.** A wrench or a key left attached to a rotating part of the power tool may result in personal injury.
- **Do not overreach. Keep proper footing and balance at all times.** This enables better control of the power tool in unexpected situations.
- **Dress properly. Do not wear loose clothing or jewellery. Keep your hair and clothing away from moving parts.** Loose clothes, jewellery or long hair can be caught in moving parts.
- **If devices are provided for the connection of dust extraction and collection facilities, ensure these are connected and properly used.** Use of dust collection can reduce dust-related hazards.
- **Do not let familiarity gained from frequent use of tools allow you to become complacent and ignore tool safety principles.** A careless action can cause severe injury within a fraction of a second.

POWER TOOL USE AND CARE

- **Do not force the power tool. Use the correct power tool for your application.** The correct power tool will do the job better and safer at the rate for which it was designed.
- **Do not use the power tool if the switch does not turn it on and off.** Any power tool that cannot be controlled with the switch is dangerous and must be repaired.
- **Disconnect the plug from the power source and/or remove the battery pack, if detachable, from the power tool before making any adjustments,**

changing accessories, or storing power tools. Such preventive safety measures reduce the risk of starting the power tool accidentally.

- **Store idle power tools out of the reach of children and do not allow persons unfamiliar with the power tool or these instructions to operate the power tool.** Power tools are dangerous in the hands of untrained users.
- **Maintain power tools and accessories. Check for misalignment or binding of moving parts, breakage of parts and any other condition that may affect the power tool's operation. If damaged, have the power tool repaired before use.** Many accidents are caused by poorly maintained power tools.
- **Keep cutting tools sharp and clean.** Properly maintained cutting tools with sharp cutting edges are less likely to bind and are easier to control.
- **Use the power tool, accessories and tool bits etc. in accordance with these instructions, taking into account the working conditions and the work to be performed.** Use of the power tool for operations different from those intended could result in a hazardous situation.
- **Keep handles and grasping surfaces dry, clean and free from oil and grease.** Slippery handles and grasping surfaces do not allow for safe handling and control of the tool in unexpected situations.

BATTERY TOOL USE AND CARE

- **Recharge only with the charger specified by the manufacturer.** A charger that is suitable for one type of battery pack may create a risk of fire when used with another battery pack.
- **Use power tools only with specifically designated battery packs.** Use of any other battery packs may create a risk of injury and fire.
- **When battery pack is not in use, keep it away from other metal objects, like paper clips, coins, keys, nails, screws or other small metal objects, that can make a connection from one terminal to another.** Shorting the battery terminals together may cause burns or a fire.
- **Under abusive conditions, liquid may be ejected from the battery; avoid contact. If contact accidentally occurs, flush with water. If liquid contacts eyes, additionally seek medical help.** Liquid ejected from the battery may cause irritation or burns.
- **Do not use a battery pack or tool that is damaged or modified.** Damaged or modified batteries may exhibit unpredictable behaviour resulting in fire, explosion or risk of injury.
- **Do not expose a battery pack or tool to fire or excessive temperature.** Exposure to fire or temperature above 130°C may cause explosion.
- **Follow all charging instructions and do not charge the battery pack or tool outside the temperature range specified in the instructions.** Charging improperly or at temperatures outside the specified range may damage the battery and increase the risk of fire.

SERVICE

- **Have your power tool serviced by a qualified repair person using only identical replacement parts.** This will ensure that the safety of the power tool is maintained.
- **Never service damaged battery packs.** Service of battery packs should only be performed by the manufacturer or authorized service providers.

PERCUSSION DRILL SAFETY WARNINGS

SAFETY INSTRUCTIONS FOR ALL OPERATIONS

- **Hold the power tool by insulated gripping surfaces, when performing an operation where the cutting accessory or fasteners may contact hidden wiring**. Cutting accessory or fasteners contacting a "live" wire may make exposed metal parts of the power tool "live" and could give the operator an electric shock.

SAFETY INSTRUCTIONS WHEN USING LONG DRILL BITS

- **Never operate at higher speed than the maximum speed rating of the drill bit.** At higher speeds, the bit is likely to bend if allowed to rotate freely without contacting the workpiece, resulting in personal injury.
- **Always start drilling at low speed and with the bit tip in contact with the workpiece.** At higher speeds, the bit is likely to bend if allowed to rotate freely without contacting the workpiece, resulting in personal injury.
- **Apply pressure only in direct line with the bit and do not apply excessive pressure.** Bits can bend causing breakage or loss of control, resulting in personal injury.

ADDITIONAL SAFETY WARNINGS

- **Clamp workpiece with a clamping device.** Unclamped workpieces can cause severe injury and damage.
- Ambient temperature range for tool during operation is between 0°C and 40°C.
- Ambient temperature range for tool storage is between 0°C and 40°C.
- The recommended ambient temperature range for the charging system during charging is between 10°C and 38°C.

ADDITIONAL BATTERY SAFETY WARNINGS

⚠ WARNING

To reduce the risk of fire, personal injury, and product damage due to a short circuit, never immerse your tool, battery pack or charger in fluid or allow a fluid to flow inside them. Corrosive or conductive fluids, such as seawater, certain industrial chemicals, and bleach or bleach-containing products, etc., can cause a short circuit.

- Ambient temperature range for battery during use is between 0°C and 40°C.
- Ambient temperature range for battery storage is between 0°C and 20°C.

TRANSPORTING LITHIUM BATTERIES

Transport the battery in accordance with local and national provisions and regulations.

Follow all special requirements on packaging and labelling when transporting batteries by a third party. Ensure that no batteries can come in contact with other batteries or conductive materials while in transport by protecting exposed connectors with insulating, non-conductive caps or tape. Do not transport batteries that are cracked or leaking. Check with the forwarding company for further advice.

RESIDUAL RISKS

Even when the product is used as prescribed, it is still impossible to completely eliminate certain residual risk factors. The following hazards may arise and the operator should pay special attention to avoid the following:

- Damage to hearing caused by noise
  - Wear suitable hearing protection and limit exposure.
- Injury to the eyes
  - Wear protective eye shields or goggles when using the product.
- Injury caused by vibration
  - Limit exposure. Follow the instructions in Risk Reduction.
- Electric shock caused by contact with hidden wires
  - Hold the product only by insulated surfaces.
- Injury caused by dust
  - Dust created by operating the product can cause respiratory injury. Wear appropriate dust control mask with filters suitable for protecting against particles from the material being worked on.

RISK REDUCTION

It has been reported that vibrations from handheld tools may contribute to a condition called Raynaud's Syndrome in certain individuals. Symptoms may include tingling, numbness and blanching of the fingers, usually apparent upon exposure to cold. Hereditary factors, exposure to cold and dampness, diet, smoking and work practices are all thought to contribute to the development of these symptoms. There are measures that can be taken by the operator to possibly reduce the effects of vibration:

- Keep your body warm in cold weather. When operating the unit wear gloves to keep the hands and wrists warm. It is reported that cold weather is a major factor contributing to Raynaud's Syndrome.
- After each period of operation, exercise to increase blood circulation.
- Take frequent work breaks. Limit the amount of exposure per day.

If you experience any of the symptoms of this condition, immediately discontinue use and see your doctor about these symptoms.

⚠ WARNING

Injuries may be caused, or aggravated, by prolonged use of a tool. When using any tool for prolonged periods, ensure you take regular breaks.

KNOW YOUR PRODUCT

See page 5.

1. Gear selector
2. Quick mode selector
3. Torque adjustment ring
4. Keyless chuck
5. Direction of rotation selector
6. Variable speed switch trigger
7. LED light
8. Bit storage
9. Screw driver bit
10. Battery port
11. Handle, insulated gripping surface

MAINTENANCE

⚠ WARNING

The product should never be connected to a power supply when you are assembling parts, making adjustments, cleaning, performing maintenance, or when the product is not in use. Disconnecting the product will prevent accidental starting that could cause serious injury.

- When servicing, use only identical replacement parts. Use of any other parts may create a hazard or cause product damage.
- Avoid using solvents when cleaning plastic parts. Most plastics are susceptible to various types of commercial solvents and may be damaged by their use. Use clean cloths to remove dirt and carbon dust.
- Do not at any time let brake fluids, gasoline, petroleum-based products, penetrating oils, etc., come in contact with plastic parts. They contain chemicals that can damage, weaken or destroy plastic.
- Always wear safety goggles or safety glasses with side shields during power tool operation or when blowing dust. If operation is dusty, also wear a dust mask.
- For greater safety and reliability, all repairs should be performed by an authorised service centre.

LUBRICATION

All of the bearings in the product are lubricated with a sufficient amount of high grade lubricant for the life span of the product under normal operating conditions. Therefore,

no further lubrication is required.

ENVIRONMENTAL PROTECTION



Recycle raw materials instead of disposing of as waste. The machine, accessories and packaging should be sorted for environmental-friendly recycling.

SYMBOLS



Safety alert



CE conformity

V

Volts



Direct current

min^{-1}

Revolutions or reciprocations per minute

Ø

Chuck capacity

n_o

No-load speed



EurAsian Conformity Mark



Please read the instructions carefully before starting the machine.



001

Ukrainian mark of conformity



Drilling without impact



Screwdriving



Percussion drill



Waste electrical products should not be disposed of with household waste. Please recycle where facilities exist. Check with your local authority or retailer for recycling advice.

SYMBOLS IN THIS MANUAL



Note



Warning



Parts or accessories sold separately



Torque, maximum



Torque, minimum



Speed, minimum



Speed, maximum

The following signal words and meanings are intended to explain the levels of risk associated with this product:

⚠ DANGER

Indicates an imminently hazardous situation, which, if not avoided, will result in death or serious injury.

⚠ WARNING

Indicates a potentially hazardous situation, which, if not avoided, could result in death or serious injury.

⚠ CAUTION

Indicates a potentially hazardous situation, which, if not avoided, may result in minor or moderate injury.

CAUTION

(Without Safety Alert Symbol) Indicates a situation that may result in property damage.

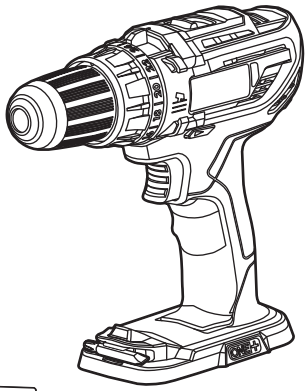





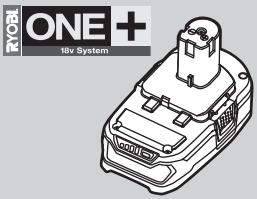
RYOBI
ONE+
18v System

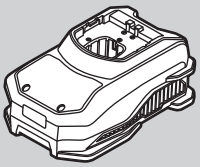

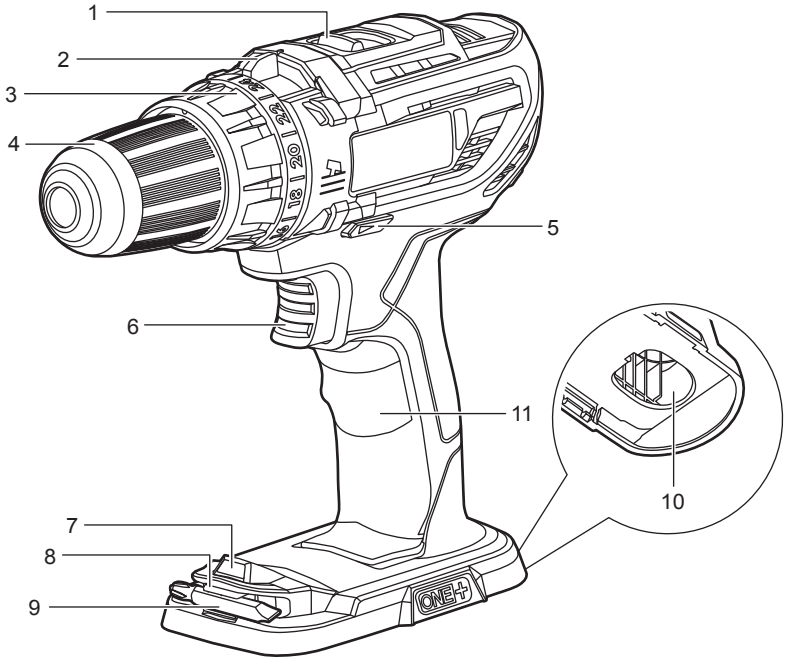
1
2
3
4
5
6
7
8
9
10
11
ONE+

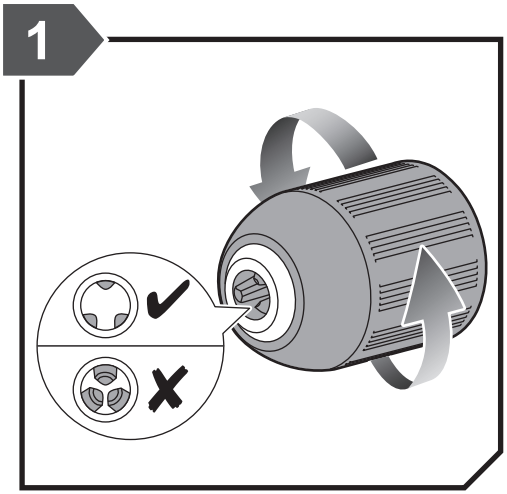
1

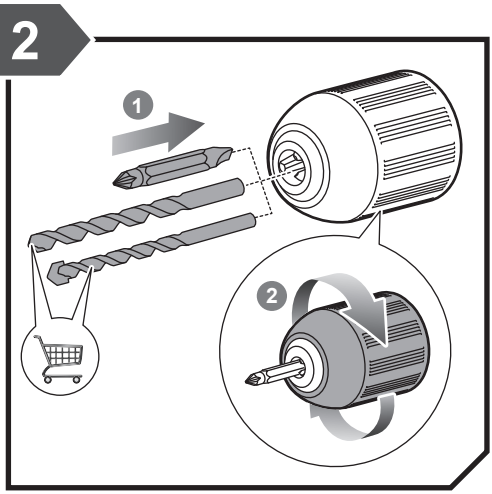
2
1
2

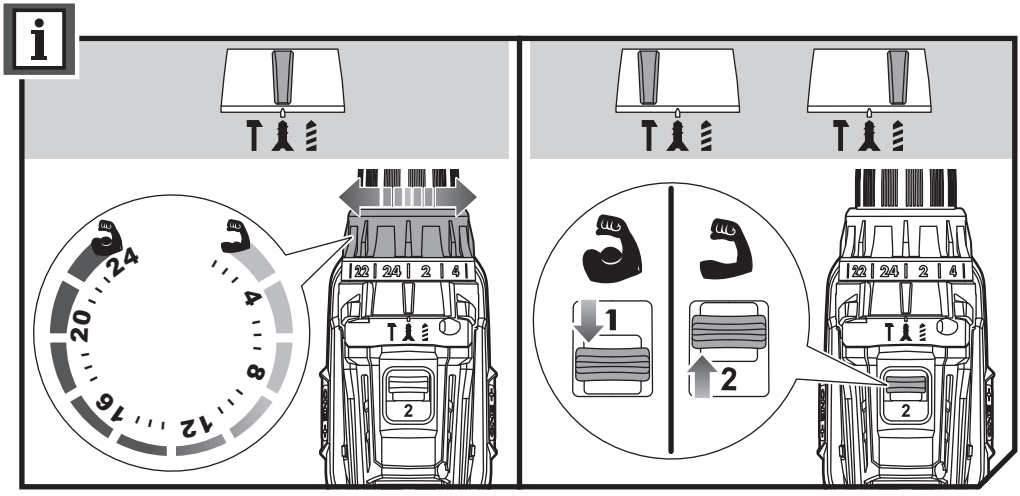
i
22 24 2 4
2
24
20
16
12
8
4
1
2

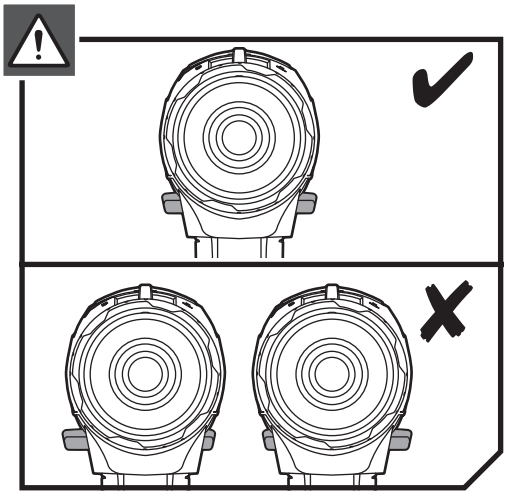

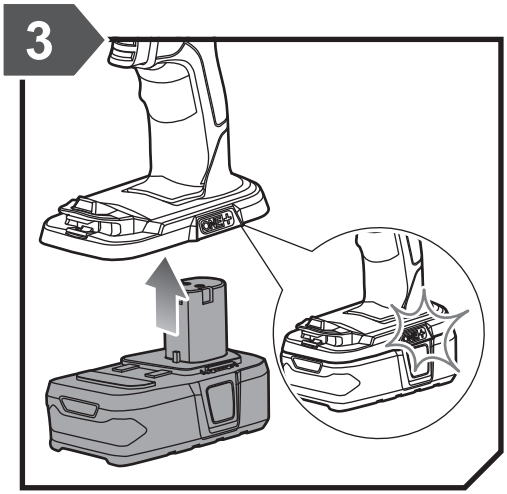

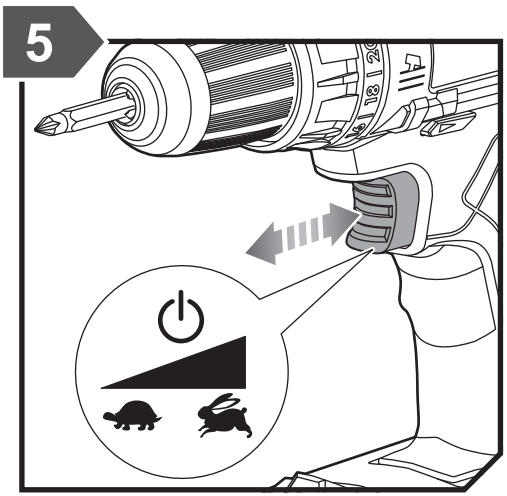

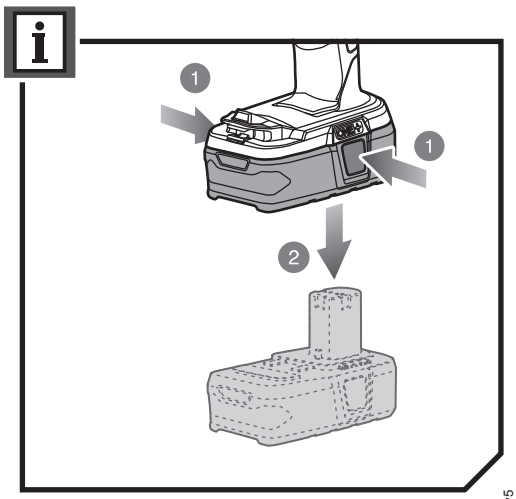

20191115v5

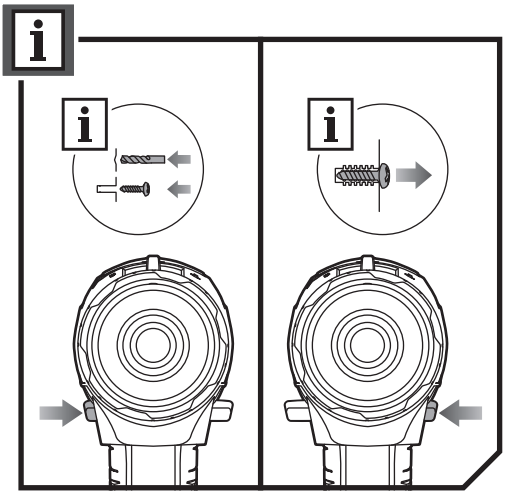

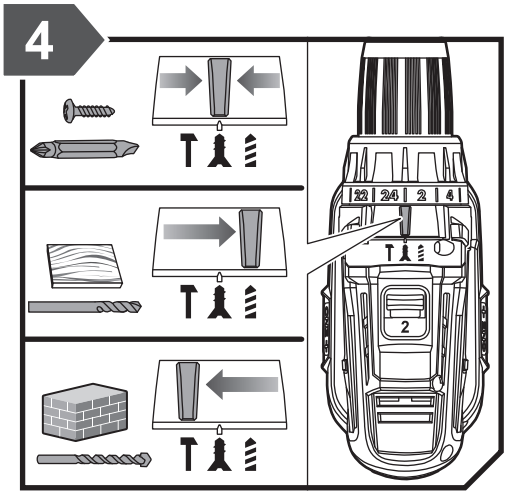
4
22
24
2
4
2

PRODUCT SPECIFICATIONS

Percussion drill	
Model	R18PD3
Voltage	18 V ⎓
Chuck	2 - 13 mm
Switch	Variable speed
No load speed (drill mode):	
- Lo speed	0 - 500 min^{-1}
- Hi speed	0 - 1800- min^{-1}
No load speed (Percussion drill mode):	
- Lo speed	0 - 6500 IPM
- Hi speed	0 - 23400 IPM
Clutch (positions)	24
Maximum torque	50 Nm
Maximum drilling capacity in wood	38 mm
Maximum drilling capacity in metal	13 mm
Maximum drilling capacity in masonry	13 mm
Weight (According to EPTA procedure 01/2014)	1.7 kg (1.3Ah) - 2.5 kg (9.0Ah)
Weight - not incl. battery pack	1.3 kg

Measured sound values determined according to EN 62841:	
A-weighted sound pressure level Uncertainty K	L_{pA} = 85.5 dB(A) 5 dB(A)
A-weighted sound power level Uncertainty K	L_{wA} = 96.5 dB(A) 5 dB(A)
Wear ear protectors.	
The vibration total values (triax vector sum) determined according to EN 62841:	
Impact drilling into concrete	$a_{h,\,ID}$ = 8.2 m/s^2
Uncertainty K	1.5 m/s^2
Drilling into metal	$a_{h,\,D} \leq$ 2.5 m/s^2
Uncertainty K	1.5 m/s^2
Screwdriving without impact	$a_h \leq$ 2.5 m/s^2
Uncertainty K	1.5 m/s^2

BATTERY AND CHARGER

Model	Compatible battery pack (not included)	Compatible charger (not included)
Lithium-ion	RB18L13 RB18L15 RB18L15B RB18L20 RB18L25 RB18L40 RB18L50	BCS618 BCL14181H BCL14183H RC18150 RC18627 RC18115 RC18120 RC18118C

VIBRATION LEVEL

WARNING

The vibration emission level given in this information sheet has been measured in accordance with a standardised test given in EN 62841 and may be used to compare one tool with another. It may be used for a preliminary assessment of exposure. The declared vibration emission level represents the main applications of the tool. However if the tool is used for different applications, with different accessories or poorly maintained, the vibration emission may differ. This may significantly increase the exposure level over the total working period.

An estimation of the level of exposure to vibration should also take into account the times when the tool is switched off or when it is running but not actually doing the job. This may significantly reduce the exposure level over the total working period. Identify additional safety measures to protect the operator from the effects of vibration such as: maintain the tool and the accessories, keep the hands warm and organisation of work patterns.

RYOBI® WARRANTY APPLICATION CONDITIONS

In addition to any statutory rights resulting from the purchase, this product is covered by a warranty as stated below.

1. The warranty period is 24 months for consumers and commences on the date the product was purchased. This date has to be documented by an invoice or other proof of purchase. The product is designed and dedicated to consumer and private use only. So there is no warranty provided in case of professional or commercial use. This warranty applies only on new products.
2. There is a possibility to extend for a part of the range of power tools (AC/DC) the warranty period over the period described above using the registration on the www.ryobitools.eu website. The eligibility of products for extended warranty is clearly displayed in stores and / or on packaging / and contained within the product documentation. The end user is required to register his/her newly-acquired products online within 30 days from the date of purchase. The end user may register for the extended warranty in his/her country of residence if listed on the online registration form where this option is valid. Furthermore, end users must give their consent to the storage of their personal data that is required to be entered online. They must also accept the terms and conditions. The registration confirmation receipt, which is sent out by e-mail, and the original invoice showing the date of purchase will serve as proof of the extended warranty.
3. The warranty covers all defects of the product during the warranty period due to faults in workmanship or material at the purchase date. The warranty is limited to repair and/or replacement and does not include any other obligations including but not limited to incidental or consequential damages. The warranty is not valid if the product has been misused, used contrary to the instruction manual, or has been incorrectly connected to a power supply. This warranty does not apply to:
   - any damage to the product that is the result of improper or lack of maintenance
   - any product that has been altered or modified
   - any product where original identification (trade mark, serial number) markings have been defaced, altered or removed
   - any damage caused by non-observance of the instruction manual
   - any product not displaying the CE approval mark on the rating plate
   - any product that has been attempted to be repaired by a non Authorised warranty service center or without prior authorization by Techtronic Industries
   - any product connected to an improper power supply (amps, voltage, frequency)
   - any product used with inappropriate fuel mixture (fuel, oil, Ratio of oil / fuel mixture)
   - any damage caused by external influences (water, chemical, physical, shocks) or foreign substances
   - normal wear and tear spare parts
   - inappropriate use, overloading of the tool
   - use of non-approved accessories or parts
   - Power tool accessories provided with the tool or purchased separately. including but not limited to screw driver bits, drill bits, abrasive discs, sand paper and blades, lateral guide etc.
   - Components (parts and accessories) subject to natural wear and tear, including but not limited to Service & Maintenance Kits, carbon brushes, bearings, chuck, SDS drill bit attachment or reception, power cord, auxiliary handle, transport carry case, sanding plate, dust bag, dust exhaust tube, felt washers, impact wrench pins & springs, etc.
4. For servicing, the product must be sent or presented to a RYOBI authorized service station listed for each country in the following list of service station addresses. In some countries your local RYOBI dealer undertakes to send the product to the RYOBI service organisation. When sending a product to a RYOBI service station, the product should be safely packed without any dangerous contents such as petrol, marked with sender's address and accompanied by a short description of the fault.
5. A repair / replacement under this warranty is free of charge. It does not constitute an extension or a new start of the warranty period. Exchanged parts or products become our property. In some countries delivery charges or postage will have to be paid by the sender. Your statutory rights arising from the purchase of the product remain unaffected.
6. This warranty is valid in the European Community, Switzerland, Iceland, Norway, Liechtenstein, Turkey and Russia. Outside these areas, please contact your authorized RYOBI dealer to determine if another warranty applies.

AUTHORISED SERVICE CENTRES

ACD PLANT LTD
145 Southbank Road
Coundon
Coventry, West Midlands
CV6 1FG
Phone: 02476 594348
Email: danmcgunigle@acdplant.co.uk
Web: www.acdplant.co.uk

CBS Power Tools Limited
Unit 4, V P Square
Storeys Bar Rd, Fengate
Peterborough, Cambridgeshire
PE1 5YS
Phone: 01733 343031
Email: steve@cbspowertools.co.uk
Web: www.cbspowertools.com

C D Powertools
76 Old Road
Churwell Morley, Leeds
LS27 7TH
Phone: 0113 2718494
Email: info@cdpowertools.co.uk
Web : www.cdpowertools.co.uk

C J Sinclair Limited
44 Victoria Road
St Peters
Broadstairs, Kent
CT10 2UG
Phone: 01843 869400
Email: repairs@cjsinclairltd.co.uk
Web: www.cjsinclairltd.co.uk

Powertech Ind Ltd
Unit 2C, Ellison Road
Norwood Ind, Killamarsh
Sheffield, South Yorkshire
S21 2JG
Phone: 01142 474080
Email: stores@powertech-industrial.co.uk
Web: www.powertech-industrial.co.uk

RYCKO Technical Services LTD
104 Green Lane
St Albans, Herts
AL3 6EX
Phone: 08458 678790
Email: info@ryckotechnical.com
Web: www.ryckotechnical.com

ToolTech Industrial Equipment
227 E Dunhill Road, Macosquin
Coleraine, Co Londonderry
BT514LQ
Phone: 028 70359493
Email: john@tooltech.org.uk

For an updated list of authorised service centres, visit http://uk.ryobitools.eu/header/service-and-support/service-agents.

DECLARATION OF CONFORMITY

Techtronic Industries GmbH
Max-Eyth-Straße 10, 71364 Winnenden, Germany

Herewith we declare that the product

Percussion drill
Brand: RYOBI
Model number: R18PD3
Serial number range: 46229702000001 - 46229702999999

is in conformity with the following European Directives and harmonised standards

2006/42/EC, 2014/30/EU, 2011/65/EU,
EN 55014-1:2017, EN55014-2:2015, EN 62841-1:2015, EN 62841-2-1:2018

RoHS documentation is compiled according to EN IEC 63000:2018



CE

Todd Chipner
Sr. Director, CPT Quality and Asia Regulatory & Safety
Winnenden, Feb. 28, 2019

Authorised to compile the technical file:

Alexander Krug, Managing Director

Techtronic Industries GmbH

Max-Eyth-Straße 10, 71364 Winnenden, Germany



RYOBI is a trademark of Ryobi Limited,
and is used under license.
© 2019 Techtronic Cordless GP. All rights reserved.

Techtronic Industries GmbH
Max-Eyth-Straße 10,
71364 Winnenden, Germany

961075415-04