ORIGINAL INSTRUCTIONS

Charger

RC18120



Important!

This appliance is not intended to be used or cleaned by persons with reduced physical, sensory or mental capabilities, or lack of experience or knowledge, unless they have been given instructions concerning the safe use of the appliance by a person legally responsible for their safety. They should be supervised whilst using the appliance. Children shall not use, clean or play with this appliance, which when not in use should be secured out of their reach.

Safety, performance, and dependability have been given top priority in the design of your charger.

INTENDED USE

This charger is only intended to charge RYOBI ONE+ Lithium-Ion battery packs listed in this manual.

The product is only for use indoors in dry conditions.

The product is not intended to charge any other type of battery, to be used as a power supply, or for any other purpose. It should never be used in explosive or inflammable environments.

CHARGER SAFETY WARNINGS

Please read and observe these instructions before using the product. Failure to follow these instructions and warnings increases the risk of electric shock, fire and explosion.

⚠ WARNING

Do not recharge primary cells (non-rechargeable).

⚠ WARNING

Mains voltage must correspond with the voltage specifications on the product.

- Before using the product, check that the product enclosure, cable and adaptor plug are not damaged. If damage is found, do not use and follow instruction in the maintenance section of this manual.
- The product must not be damp, and should never be used in a damp environment.
- The product is for indoor use only.
- Do not use the product if it has suffered any heavy shock or jolting, or is damaged in any other way.
- Do not conduct charging in a position which may become exposed to sunlight or other heat source.
- Due to the heat generated during charging, the product should not be operated on a combustible surface.
- Do not conduct charging operations in the vicinity of flammable materials. Example: Cloth, packaging materials, paint, spray paint or aerosols, lubricant, thinners, petrol containers, gas containers or gas appliances.
- Do not cover any ventilating slots and provide adequate ventilation during operation.
- Never modify, disassemble or attempt to repair the product yourself.
- Do not allow the charger or batteries to become contaminated with any material which could be conductive. Example: Metal particles from grinding, cutting or machining processes.
- Remove the plug of the product from the power socket when it is not in use or when cleaning it.
- Only use extension cable that is approved and in good condition.
- Protect battery contacts to avoid a short circuit caused by metallic objects which could cause a fire or explosion!
- Do not charge batteries which show signs they have leaked electrolyte. Dispose of them properly.
- Never charge a damaged battery pack. If damaged, replace immediately.
- If the battery is not going to be used for a while, remove the charger plug from the power socket and take the battery off the product.

ADDITIONAL BATTERY SAFETY WARNINGS

⚠ WARNING

To reduce the risk of fire, personal injury, and product damage due to a short circuit, never immerse your tool, battery pack or charger in fluid or allow a fluid to flow inside them. Corrosive or conductive fluids, such as seawater, certain industrial chemicals, and bleach or bleach-containing products, etc., can cause a short circuit.

TRANSPORTING LITHIUM BATTERIES

Transport the battery in accordance with local and national provisions and regulations.

Follow all special requirements on packaging and labelling when transporting batteries by a third party. Ensure that no batteries can come in contact with other batteries or conductive materials while in transport by protecting exposed connectors with insulating, non-conductive caps or tape. Do not transport batteries that are cracked or leaking. Check with the forwarding company for further advice.

KNOW YOUR PRODUCT

See page 6.

1. Battery port
2. Adaptor
3. Red LED
4. Green LED
5. Key hole hanger

OPERATION

CHARGING THE BATTERY PACK

Battery packs are shipped in a low charge condition to prevent possible problems. Therefore, you should charge them before first use. If the charger does not charge your battery pack under normal circumstances, return both the battery pack and charger to your nearest authorised service center for electrical check.

Do not charge nickel cadmium (NiCd) battery packs. When a NiCd battery pack is inserted, the red LED will light up and green LED will be off.

Make sure the power supply is normal household voltage, 220 V – 240 V, 50 / 60 Hz 60 W, AC only.

NOTE: After charging is complete, the green LED will remain on until the battery pack is removed from the charger or charger is disconnected from the power supply.

The battery pack will become slightly warm to the touch while charging. This is normal and does not indicate a problem.

Do not place the charger and battery pack in an area of extreme heat or cold. They will work best at normal room temperature.

NOTE: The charger and battery pack should be placed in a location where the temperature is more than 10°C but less than 38°C.

CHARGING A HOT BATTERY PACK

When using a tool continuously, the batteries in the battery pack will become hot. You should let a hot battery pack cool down for approximately 30 minutes before attempting to recharge.

MAINTENANCE

- If the supply cord is damaged, it must be replaced by the manufacturer, its service agent or similarly qualified persons in order to avoid a hazard.
- Remove the plug of the product from the power socket when it is not in use or when cleaning it.
- Avoid using solvents when cleaning plastic parts. Most plastics are susceptible to various types of commercial solvents and may be damaged by their use. Use clean cloth or soft brush to remove dirt, dust, etc.
- Do not at any time let brake fluids, gasoline, petroleum-based products, penetrating oils, etc., come in contact with plastic parts. They contain chemicals that can damage, weaken or destroy plastic.

⚠ WARNING

Hazardous voltages are present within this product; do not disassemble.

- There are no user service or replacement parts inside this product. In case of damage or failure please return to your authorised RYOBI service centre for professional repair.

STORAGE

- Store your charger in a cool dry place between 10 and 25°C.
- It is not recommended to leave it in a vehicle during hot or cold conditions. Ensure no metal filings or swarf can fall into the vents during storage, as this may cause serious injury when it is next used.

ENVIRONMENTAL PROTECTION



Recycle raw materials instead of disposing of as waste. The machine, accessories and packaging should be sorted for environment-friendly recycling.

SYMBOLS ON THE PRODUCT



Safety alert

CE conformity

EurAsian Conformity Mark

Ukrainian mark of conformity



Class II equipment



Please read the instructions carefully before starting the machine.



For indoor use only.



Time-lag fuse 2A



Waste electrical products should not be disposed of with household waste. Please recycle where facilities exist. Check with your local authority or retailer for recycling advice.

SYMBOLS IN THIS MANUAL



Connect to the power supply



Disconnect from the power supply



Parts or accessories sold separately

The following signal words and meanings are intended to explain the levels of risk associated with this product:

⚠ DANGER
Indicates an imminently hazardous situation, which, if not avoided, will result in death or serious injury.

⚠ WARNING
Indicates a potentially hazardous situation, which, if not avoided, could result in death or serious injury.

⚠ CAUTION
Indicates a potentially hazardous situation, which, if not avoided, may result in minor or moderate injury.

CAUTION
(Without Safety Alert Symbol) Indicates a situation that may result in property damage.

COMPATIBLE BATTERY PACKS

Battery Pack	Voltage	Charger Input	Battery type	Battery Capacity	Number of Cell for Battery	Approximate charging time
RB18L13	18 V ⎓	220 - 240V ∿ 50 / 60 Hz 60 W	Lithium-Ion	1.3 Ah	5	40 minutes
RB18L15				1.5 Ah	5	45 minutes
RB18L20				2.0 Ah	5	60 minutes
RB18L25				2.5 Ah	5	75 minutes
RB18L26				2.6 Ah	10	80 minutes
RB18L40				4.0 Ah	10	120 minutes
RB18L50				5.0 Ah	10	150 minutes

LED CHARGE INDICATOR

CHARGER LED INDICATOR		BATTERY PACK STATUS	RED LED	GREEN LED	ACTION
	Power	Without battery pack	ON	OFF	Ready to charge battery pack.
	Evaluate	Hot battery pack	Flashing	OFF	When battery pack reaches cooled temperature, charger begins fast charge mode.
	Evaluate	Cold battery pack	Flashing	OFF	When battery pack reaches warmed temperature, charger begins fast charge mode.
	Evaluate	Deeply discharged	Flashing	OFF	Charger pre-charges battery until normal voltage is reached, then begins fast charge mode.
	Defective	Defective	Flashing	Flashing	Battery pack or charger is defective.
	• If defective, try to repeat the conditions a second time by removing and reinstalling the battery pack. If the LED status repeats a second time, try charging a different battery. • If a different battery charges normally, dispose of the defective pack (see Maintenance section). • If a different battery also indicates "Defective," the charger may be defective.				
	Charging	Fast charging	ON	Flashing	—
	Full	—	OFF	ON	Charging complete

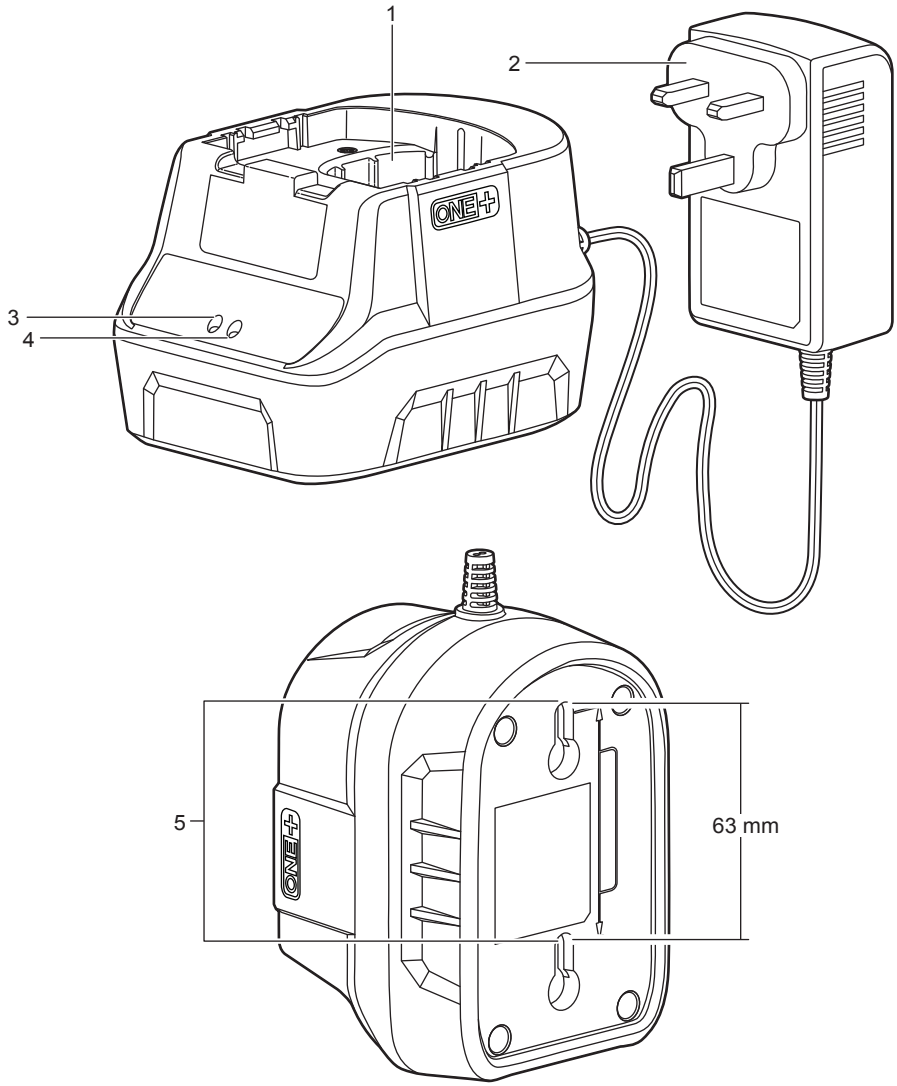
1
2
3
4
5
63 mm

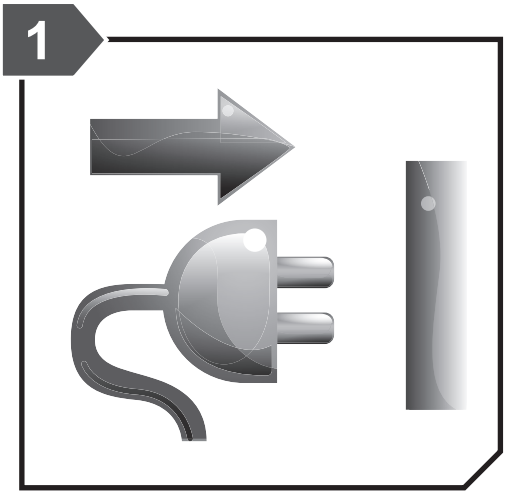
1

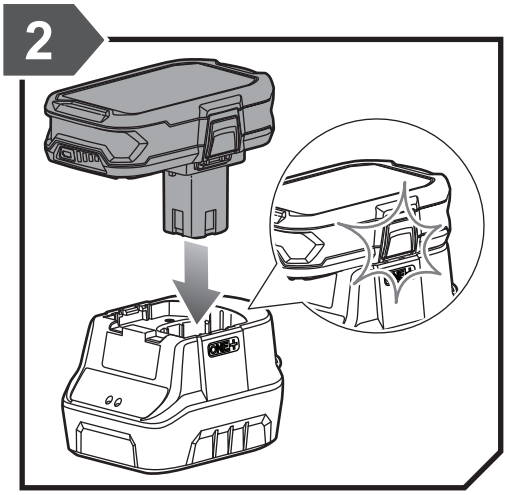
2

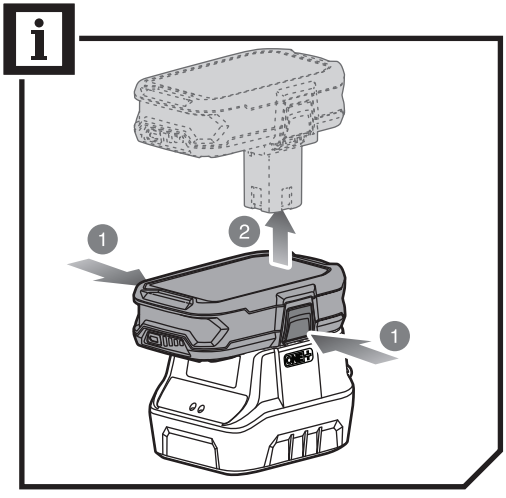
i
1
2
1

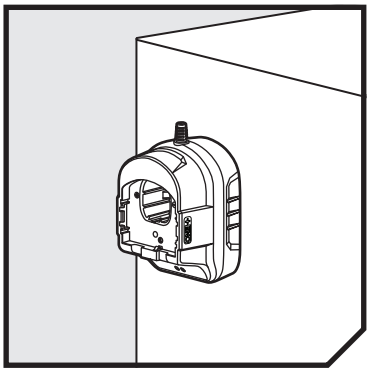

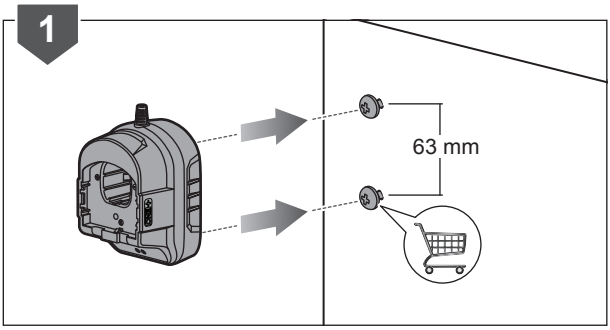

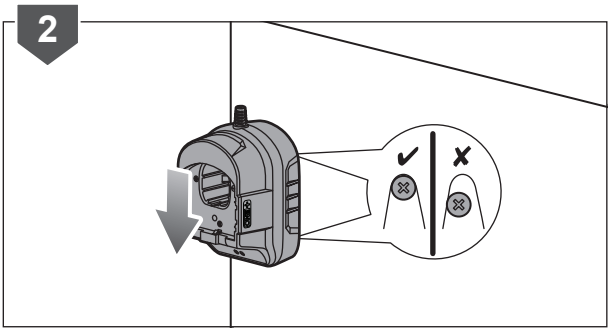

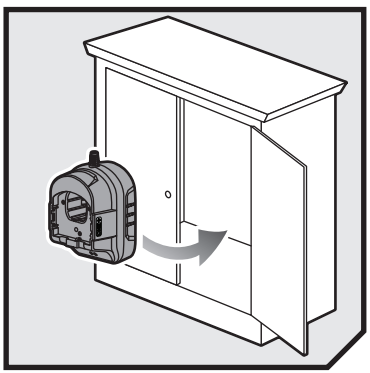

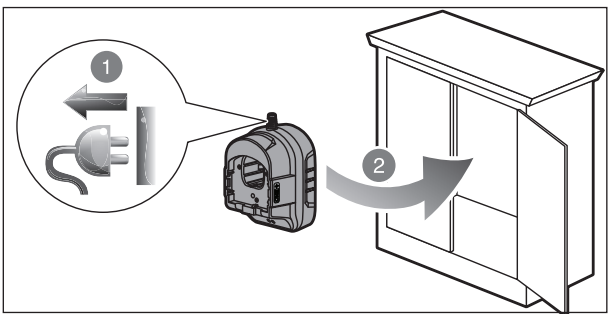

20170814V2

PRODUCT SPECIFICATIONS

Charger	
Model	RC18120

Charger	
Input	220 - 240V ∿ 50 / 60 Hz 60 W
Output	18 V ⎓ 2A

Battery Pack	
Voltage	18 V ⎓
Battery type	Lithium-Ion
Operating temperature	0°C - 40°C

AUTHORISED SERVICE CENTRES

ACD PLANT LTD
145 Southbank Road
Coundon
Coventry, West Midlands
CV6 1FG
Phone: 02476 594348
Email: danmcgunigle@acdplant.co.uk
Web: www.acdplant.co.uk

CBS Power Tools Limited
Unit 4, V P Square
Storeys Bar Rd, Fengate
Peterborough, Cambridgeshire
PE1 5YS
Phone: 01733 343031
Email: steve@cbspowertools.co.uk
Web: www.cbspowertools.com

C D Powertools
76 Old Road
Churwell Morley, Leeds
LS27 7TH
Phone: 0113 2718494
Email: info@cdpowertools.co.uk
Web: www.cdpowertools.co.uk

C J Sinclair Limited
44 Victoria Road
St Peters
Broadstairs, Kent
CT10 2UG
Phone: 01843 869400
Email: repairs@cjsinclairltd.co.uk
Web: www.cjsinclairltd.co.uk

Powertech Ind Ltd
Unit 2C, Ellison Road
Norwood Ind, Killamarsh
Sheffield, South Yorkshire
S21 2JG
Phone: 01142 474080
Email: stores@powertech-industrial.co.uk
Web: www.powertech-industrial.co.uk

RYCKO Technical Services LTD
104 Green Lane
St Albans, Herts
AL3 6EX
Phone: 08458 678790
Email: info@ryckotechnical.com
Web: www.ryckotechnical.com

ToolTech Industrial Equipment
227 E Dunhill Road, Macosquin
Coleraine, Co Londonderry
BT514LQ
Phone: 028 70359493
Email: john@tooltech.org.uk

For an updated list of authorised service centres, visit http://en.ryobitools.eu/header/service-and-support/service-agents.

RYOBI® WARRANTY APPLICATION CONDITIONS

In addition to any statutory rights resulting from the purchase, this product is covered by a warranty as stated below.

1. The warranty period is 24 months for consumers and commences on the date the product was purchased. This date has to be documented by an invoice or other proof of purchase. The product is designed and dedicated to consumer and private use only. So there is no warranty provided in case of professional or commercial use. This warranty applies only on new products.
2. There is a possibility to extend for a part of the range of power tools (AC/DC) the warranty period over the period described above using the registration on the www.ryobitools.eu website. The eligibility of products for extended warranty is clearly displayed in stores and / or on packaging and is contained within the product documentation. The end user is required to register his/her newly-acquired products online within 30 days from the date of purchase. The end user may register for the extended warranty in his/her country of residence if listed on the online registration form where this option is valid. Furthermore, end users must give their consent to the storage of their personal data that is required to be entered online. They must also accept the terms and conditions. The registration confirmation receipt, which is sent out by e-mail, and the original invoice showing the date of purchase will serve as proof of the extended warranty.
3. The warranty covers all defects of the product during the warranty period due to faults in workmanship or material at the purchase date. The warranty is limited to repair and/or replacement and does not include any other obligations including but not limited to incidental or consequential damages. The warranty is not valid if the product has been misused, used contrary to the instruction manual, or has been incorrectly connected to a power supply. This warranty does not apply to:
   - any damage to the product that is the result of improper or lack of maintenance
   - any product that has been altered or modified
   - any product where original identification (trade mark, serial number) markings have been defaced, altered or removed
   - any damage caused by non-observance of the instruction manual
   - any product not displaying the CE approval mark on the rating plate
   - any product that has been attempted to be repaired by a non-authorised warranty service centre or without prior authorisation by Techtronic Industries
   - any product connected to an improper power supply (amps, voltage, frequency)
   - any damage caused by external influences (water, chemical, physical, shocks) or foreign substances
   - normal wear and tear spare parts
   - inappropriate use, overloading of the tool
   - use of non-approved accessories or parts
   - Power tool accessories provided with the tool or purchased separately. including but not limited to screw driver bits, drill bits, abrasive discs, sand paper and blades, lateral guide etc.
   - Components (parts and accessories) subject to natural wear and tear, including but not limited to Service & Maintenance Kits, carbon brushes, bearings, chuck, SDS drill bit attachment or reception, power cord, auxiliary handle, transport carry case, sanding plate, dust bag, dust exhaust tube, felt washers, impact wrench pins & springs, etc.
4. For servicing, the product must be sent or presented to a RYOBI authorised service station listed for each country in the following list of service station addresses. In some countries your local RYOBI dealer undertakes to send the product to the RYOBI service organisation. When sending a product to a RYOBI service station, the product should be safely packed without any dangerous contents such as petrol, marked with sender's address and accompanied by a short description of the fault.
5. A repair / replacement under this warranty is free of charge. It does not constitute an extension or a new start of the warranty period. Exchanged parts or products become our property. In some countries delivery charges or postage will have to be paid by the sender. Your statutory rights arising from the purchase of the product remain unaffected.
6. This warranty is valid in the European Community, Switzerland, Iceland, Norway, Liechtenstein, Turkey and Russia. Outside these areas, please contact your authorised RYOBI dealer to determine if another warranty applies.

RYOBI

Techtronic Industries GmbH
Max-Eyth-Straße 10,
71364 Winnenden, Germany

961152722-02