RYOBI

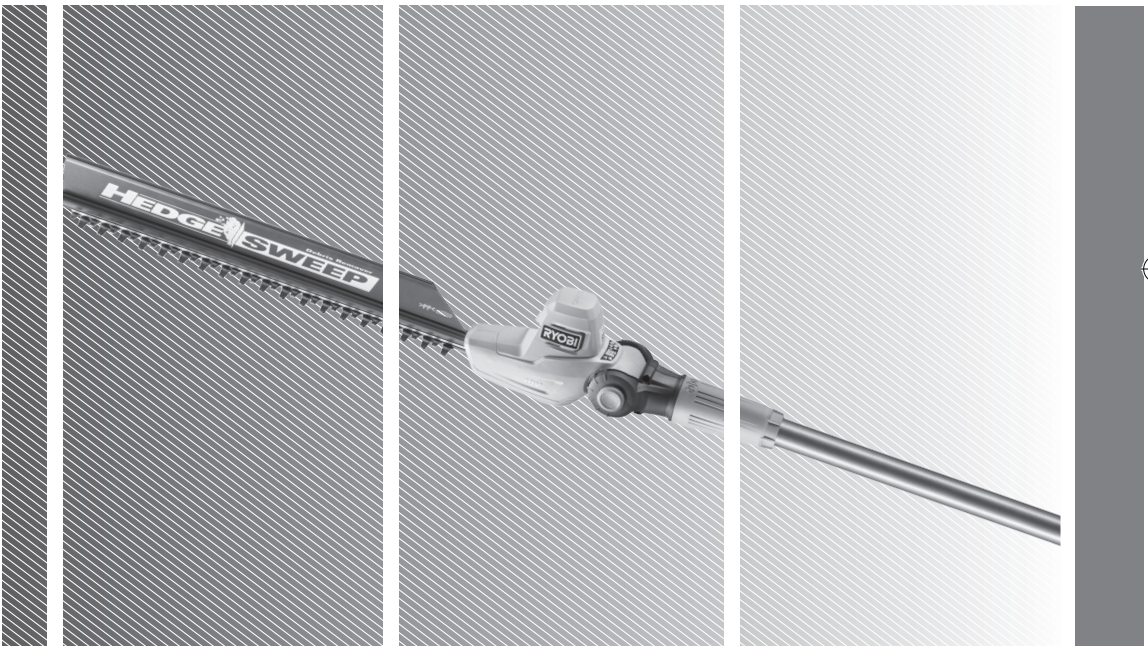

RY18PHT40A

EN ORIGINAL INSTRUCTIONS

IMPORTANT!

It is essential that you read the instructions in this manual before assembling, operating, and maintaining the product.

Subject to technical modification.

Safety, performance, and dependability have been given top priority in the design of your cordless pole hedge trimmer.

INTENDED USE

The cordless pole hedge trimmer is intended to cut and trim hedges, shrubs, and similar vegetation. The product is not intended for cutting hedges, shrubs, and similar vegetation with diameters greater than its cutting capacity.

The product is intended only for outdoor use in dry and well-illuminated conditions.

The product is designed for home or domestic use.

Do not use the product for any other purpose.

GENERAL PRODUCT SAFETY WARNINGS

⚠ **WARNING! Read all safety warnings, instructions, illustrations and specifications provided with this power tool.** Failure to follow all instructions listed below may result in electric shock, fire and/or serious injury.

Save all warnings and instructions for future reference.

The term “power tool” in the warnings refers to your mains-operated (corded) product or battery-operated (cordless) product.

WORK AREA SAFETY

- **Keep work area clean and well lit.** Cluttered or dark areas invite accidents.
- **Do not operate power tools in explosive atmospheres, such as in the presence of flammable liquids, gases or dust.** Power tools create sparks which may ignite the dust or fumes.
- **Keep children and bystanders away while operating a power tool.** Distractions can cause you to lose control.

ELECTRICAL SAFETY

- **Power tool plugs must match the outlet. Never modify the plug in any way. Do not use any adapter plugs with earthed (grounded) power tools.** Unmodified plugs and matching outlets will reduce risk of electric shock.
- **Avoid body contact with earthed or grounded surfaces, such as pipes, radiators, ranges and refrigerators.** There is an increased risk of electric shock if your body is earthed or grounded.
- **Do not expose power tools to rain or wet conditions.** Water entering a power tool will increase the risk of electric shock.
- **Do not abuse the cord. Never use the cord for carrying, pulling or unplugging the power tool. Keep cord away from heat, oil, sharp edges or moving parts.** Damaged or entangled cords increase the risk of electric shock.
- **When operating a power tool outdoors, use an extension cord suitable for outdoor use.** Use of a cord suitable for outdoor use reduces the risk of electric shock.
- **If operating a power tool in a damp location is unavoidable, use a residual current device (RCD) protected supply.** Use of an RCD reduces the risk of electric shock.

PERSONAL SAFETY

- **Stay alert, watch what you are doing and use common sense when operating a power tool. Do not use a power tool while you are tired or under the influence of drugs, alcohol or medication.** A moment of inattention while operating power tools may result in serious personal injury.
- **Use personal protective equipment. Always wear eye protection.** Protective equipment such as a dust mask, non-skid safety shoes, hard hat or hearing protection used for appropriate conditions will reduce personal injuries.
- **Prevent unintentional starting. Ensure the switch is in the off-position before connecting to power source and/or battery pack, picking up or carrying the tool.** Carrying power tools with your finger on the switch or energising power tools that have the switch on invites accidents.
- **Remove any adjusting key or wrench before turning the power tool on.** A wrench or a key left attached to a rotating part of the power tool may result in personal injury.
- **Do not overreach. Keep proper footing and balance at all times.** This enables better control of the power tool in unexpected situations.
- **Dress properly. Do not wear loose clothing or jewellery. Keep your hair and clothing away from moving parts.** Loose clothes, jewellery or long hair can be caught in moving parts.
- **If devices are provided for the connection of dust extraction and collection facilities, ensure these are connected and properly used.** Use of dust collection can reduce dust-related hazards.
- **Do not let familiarity gained from frequent use of tools allow you to become complacent and ignore tool safety principles.** A careless action can cause severe injury within a fraction of a second.

POWER TOOL USE AND CARE

- **Do not force the power tool. Use the correct power tool for your application.** The correct power tool will do the job better and safer at the rate for which it was designed.
- **Do not use the power tool if the switch does not turn it on and off.** Any power tool that cannot be controlled with the switch is dangerous and must be repaired.
- **Disconnect the plug from the power source and/or remove the battery pack, if detachable, from the power tool before making any adjustments, changing accessories, or storing power tools.** Such preventive safety measures reduce the risk of starting the power tool accidentally.
- **Store idle power tools out of the reach of children and do not allow persons unfamiliar with the power tool or these instructions to operate the power tool.**

Power tools are dangerous in the hands of untrained users.

- **Maintain power tools and accessories. Check for misalignment or binding of moving parts, breakage of parts and any other condition that may affect the power tool's operation. If damaged, have the power tool repaired before use.** Many accidents are caused by poorly maintained power tools.
- **Keep cutting tools sharp and clean.** Properly maintained cutting tools with sharp cutting edges are less likely to bind and are easier to control.
- **Use the power tool, accessories and tool bits etc. in accordance with these instructions, taking into account the working conditions and the work to be performed.** Use of the power tool for operations different from those intended could result in a hazardous situation.
- **Keep handles and grasping surfaces dry, clean and free from oil and grease.** Slippery handles and grasping surfaces do not allow for safe handling and control of the tool in unexpected situations.

BATTERY TOOL USE AND CARE

- **Recharge only with the charger specified by the manufacturer.** A charger that is suitable for one type of battery pack may create a risk of fire when used with another battery pack.
- **Use power tools only with specifically designated battery packs.** Use of any other battery packs may create a risk of injury and fire.
- **When battery pack is not in use, keep it away from other metal objects, like paper clips, coins, keys, nails, screws or other small metal objects, that can make a connection from one terminal to another.** Shorting the battery terminals together may cause burns or a fire.
- **Under abusive conditions, liquid may be ejected from the battery; avoid contact. If contact accidentally occurs, flush with water. If liquid contacts eyes, additionally seek medical help.** Liquid ejected from the battery may cause irritation or burns.
- **Do not use a battery pack or tool that is damaged or modified.** Damaged or modified batteries may exhibit unpredictable behaviour resulting in fire, explosion or risk of injury.
- **Do not expose a battery pack or tool to fire or excessive temperature.** Exposure to fire or temperature above 130 °C may cause explosion.
- **Follow all charging instructions and do not charge the battery pack or tool outside the temperature range specified in the instructions.** Charging improperly or at temperatures outside the specified range may damage the battery and increase the risk of fire.

SERVICE

- **Have your power tool serviced by a qualified repair person using only identical replacement parts.** This will ensure that the safety of the power tool is maintained.
- **Never service damaged battery packs.** Service of battery packs should only be performed by the manufacturer or authorized service providers.

POLE HEDGE TRIMMER SAFETY WARNINGS

- **Do not use the hedge trimmer in bad weather conditions, especially when there is a risk of lightning.** This decreases the risk of being struck by lightning.
- **Keep all power cords and cables away from cutting area.** Power cords or cables may be hidden in hedges or bushes and can be accidentally cut by the blade.
- **Wear ear protection.** Adequate protective equipment will reduce the risk of hearing loss.
- **Hold the hedge trimmer by insulated gripping surfaces only, because the blade may contact hidden wiring.** Blades contacting a "live" wire may make exposed metal parts of the hedge trimmer "live" and could give the operator an electric shock.
- **Keep all parts of the body away from the blade. Do not remove cut material or hold material to be cut when blades are moving.** Blades continue to move after the switch is turned off. A moment of inattention while operating the hedge trimmer may result in serious personal injury.
- **When clearing jammed material or servicing the hedge trimmer, make sure all power switches are off and the battery pack is removed or disconnected.** Unexpected actuation of the hedge trimmer while clearing jammed material or servicing may result in serious personal injury.
- **Carry the hedge trimmer by the handle with the blade stopped and taking care not to operate any power switch.** Proper carrying of the hedge trimmer will decrease the risk of inadvertent starting and resultant personal injury from the blades.
- **When transporting or storing the hedge trimmer, always use the blade cover.** Proper handling of the hedge trimmer will decrease the risk of personal injury from the blades.
- **Always use head protection when operating the pole hedge trimmer overhead.** Falling debris can result in serious personal injury.
- **Always use two hands when operating the pole hedge trimmer.** Hold the pole hedge trimmer with both hands to avoid loss of control.
- **To reduce the risk of electrocution, never use the pole hedge trimmer near any electrical power lines.** Contact with or use near power lines may cause serious injury or electric shock resulting in death.

ADDITIONAL SAFETY WARNINGS

- Check the hedges and bushes for foreign objects, such as wire fences and hidden wiring.
- While operating the product, always hold it firmly with both hands by the two handles.
- Use the product only at ground level and not on any other unstable support.
- Inspect the product before each use. Check for the correct operation of all controls. Check for loose fasteners, etc. Make sure that all guards and handles are properly and securely attached. Replace any damaged parts before use. Check for battery pack leaks.
- Do not operate the product in poor lighting. Use the product only in daylight or with good artificial light.

The operator requires a clear view of the work area to identify potential hazards.

- The use of hearing protection reduces the ability to hear warnings (shouts or alarms). Pay particular attention to potential hazards around and inside the working area. Do not get distracted and always concentrate on the task.
- To reduce the risk of injury associated with contacting moving parts, always power off the product and remove the battery pack. Allow both to cool down. Make sure that all moving parts have come to a complete stop:
  - before adjusting the working position of the cutting means
  - before servicing
  - before clearing a blockage
  - before checking, cleaning, or working on the product
  - before changing accessories
  - before leaving the product unattended
  - before inspecting the product after striking a foreign object
  - before performing maintenance
  - whenever the product starts to vibrate abnormally
- Do not force the product through heavy shrubbery. This can cause the blades to bind and slow down. If the blades slow down, reduce the pace.
- If the product is dropped, suffers heavy impact, or begins to vibrate abnormally, immediately power off the product and inspect it for damage or identify the cause of the vibration. Any part that is damaged should be properly repaired or replaced by an authorised service centre.
- Use the harness if it is supplied with the product. Carefully adjust the harness to fit comfortably and help support the weight of the product. Identify the quick-release mechanism and practice using it before you start using the product. The correct use of the quick-release mechanism may prevent serious injury in the case of an emergency. Never wear additional clothing over the harness or otherwise restrict access to the quick-release mechanism.
- Do not wear multiple belt or shoulder harnesses.
- Operate the product only in temperatures between 0 °C and 40 °C.
- Store the product in a location where the ambient temperature is between 0 °C and 40 °C.
- Injuries may be caused, or aggravated, by prolonged use of the product. When using the product for prolonged periods, ensure to take regular breaks.

ADDITIONAL BATTERY SAFETY WARNINGS

- To reduce the risk of fire, personal injury, and product damage due to a short circuit, never immerse the product, battery pack, or charger in fluid or allow fluid to flow inside them. Corrosive or conductive fluids, such as seawater, certain industrial chemicals, and bleach or bleach-containing products, etc., can cause a short circuit.
- Charge the battery pack in a location where the ambient temperature is between 0 °C and 38 °C.
- Store the battery pack in a location where the ambient temperature is between 0 °C and 40 °C.
- Use the battery pack in a location where the ambient temperature is between 0 °C and 40 °C.

TRANSPORTATION AND STORAGE

- Power off the product, and remove the battery pack. Make sure that all moving parts have come to a complete stop. Allow the product and the battery pack to cool down before storing or transporting.
- Remove all foreign materials from the product. Do not store or transport the product with the battery pack fitted. Remove the battery pack, and secure it separately. Store the product in a cool, dry, and well-ventilated place that is inaccessible to children. Keep the product away from corrosive agents, such as garden chemicals and de-icing salts. Do not store the product outdoors.
- Fit the blade cover before storing the product or during transportation.
- When transporting the product in a vehicle, secure it against movement or falling to prevent injury to persons or damage to the product.

TRANSPORTING LITHIUM BATTERIES

Transport the battery pack in accordance with local and national provisions and regulations.

Follow all special requirements on packaging and labelling when transporting batteries by a third party. Ensure that no batteries can come in contact with other batteries or conductive materials while in transport by protecting exposed connectors with insulating, non-conductive caps or tape. Do not transport batteries that are cracked or leaking. Check with the forwarding company for further advice.

MAINTENANCE

- Use only original manufacturer's replacement parts, accessories, and attachments. Failure to do so can cause possible injury, can contribute to poor performance, and may void your warranty.
- Servicing requires extreme care and knowledge and should be performed only by a qualified service technician. Have the product serviced by an authorised service centre only.
- The blades are extremely sharp. To prevent personal injury, exercise extreme caution when cleaning, lubricating, fitting, or removing the blade cover.
- Power off the product, and remove the battery pack. Allow both to cool down. Make sure that all moving parts have come to a complete stop before any cleaning or maintenance task.
- You may make adjustments and repairs that are described in this manual. For other repairs, have the product serviced by an authorised service centre only.
- After each use, clean the plastic parts with a soft, dry cloth. Any part that is damaged should be properly repaired or replaced by an authorised service centre.
- After each use, remove the debris from the blades with a stiff brush, and then carefully apply a rust-preventative lubricant before refitting the blade cover. Use a rust-preventative lubricant spray to apply an even distribution and reduce the risk of personal injury from contact with the blades. For information about a suitable spray product, check with an authorised service centre.
- Check all nuts, bolts, and screws before each use and at frequent intervals for proper tightness to ensure that

the product is in safe working condition. Any part that is damaged should be properly repaired or replaced by an authorised service centre.

KNOW YOUR PRODUCT

See pages 6–7.

1. Operator's manual
2. HEDGESWEEP debris sweeper
3. Blade
4. Angle button release
5. Blade cover
6. Quick-release mechanism
7. Harness
8. Telescopic release latch
9. Harness hanger
10. Shaft coupling
11. Lock-out trigger
12. On/Off trigger
13. Battery pack
14. Charger

SYMBOLS



Safety alert



Read and understand all instructions before operating the product. Follow all warnings and safety instructions.



Wear eye, ear, and head protection.



Do not expose the product to rain or damp conditions.



Wear non-slip, heavy-duty protective gloves.



Wear non-slip safety footwear when using the product.



To prevent serious injury, do not touch the cutting blades.



Keep sufficient distance away from electrical power lines.



Beware of thrown or flying objects. Keep all bystanders, especially children and pets, at least 15 m away from the operating area.



Guaranteed sound power level



Do not dispose of waste batteries, waste electrical and electronic equipment as unsorted municipal waste. Waste batteries and waste electrical and electronic equipment must be collected separately. Waste batteries, waste accumulators, and light sources have to be removed from the equipment. Check with your local authority or retailer for recycling advice and collection point. According to local regulations, retailers may have an obligation to take back waste batteries and waste electrical and electronic equipment free of charge. Your contribution to the reuse and recycling of waste batteries and waste electrical and electronic equipment helps to reduce the demand of raw materials. Waste batteries, in particular containing lithium, and waste electrical and electronic equipment contain valuable and recyclable materials, which can adversely impact the environment and the human health if not disposed of in an environmentally compatible manner. Delete personal data from waste equipment, if any.

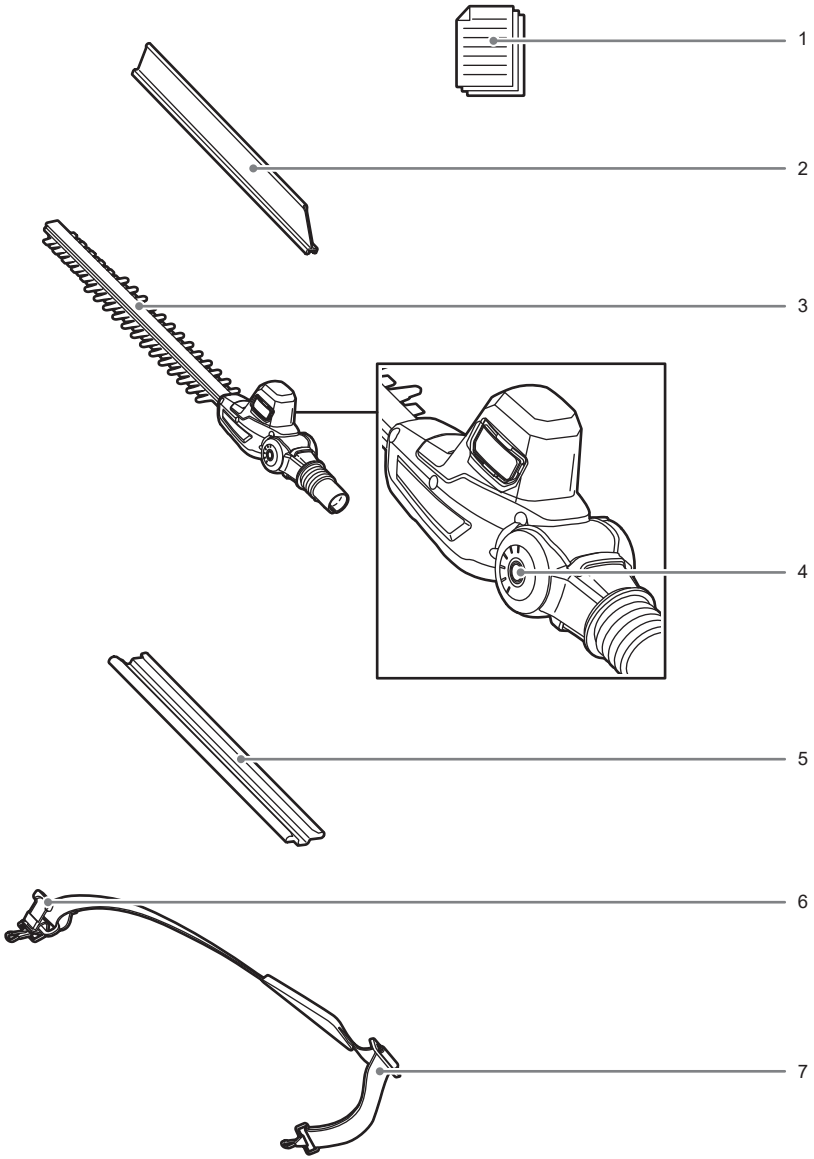
1
2
3
4
5
6
7

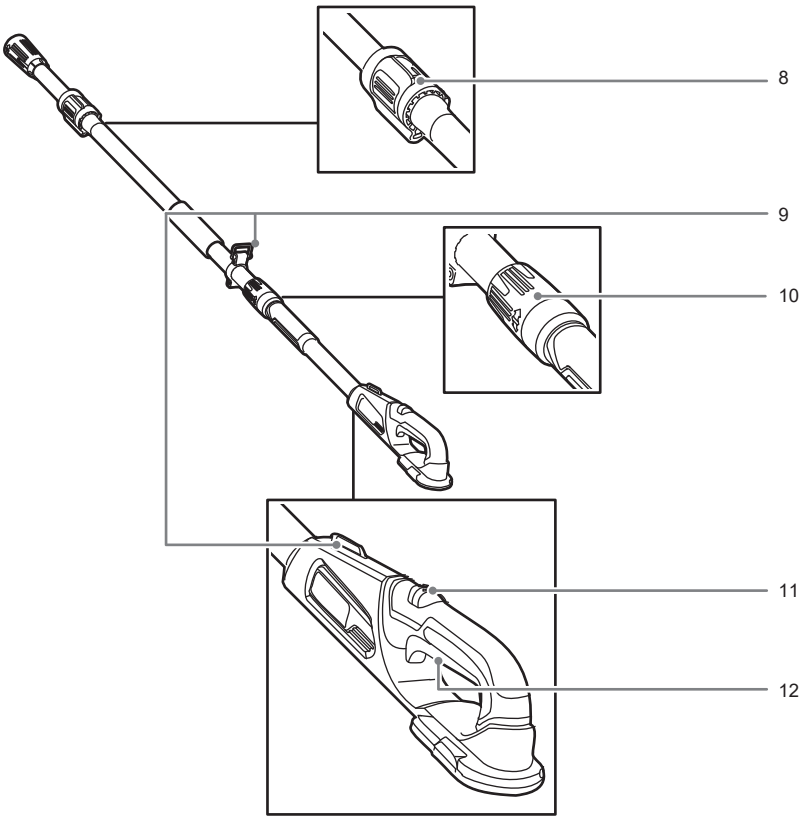
8
9
10
11
12
13
14

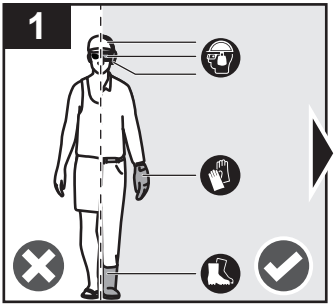
1

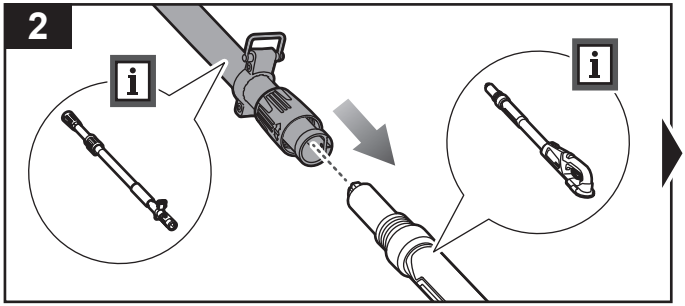
2

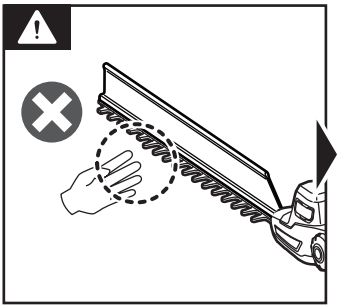

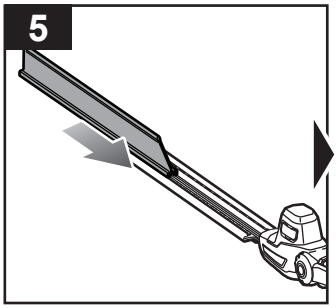
5

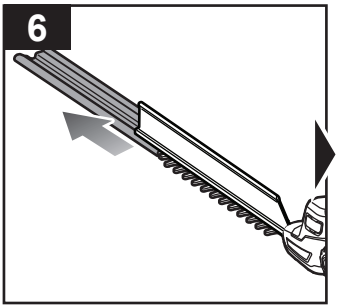
6

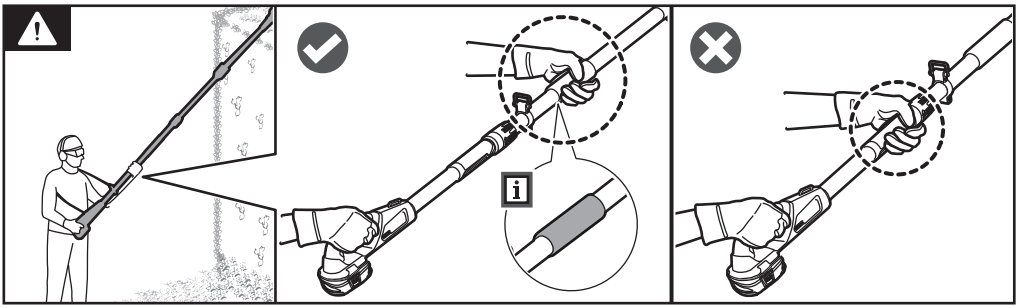

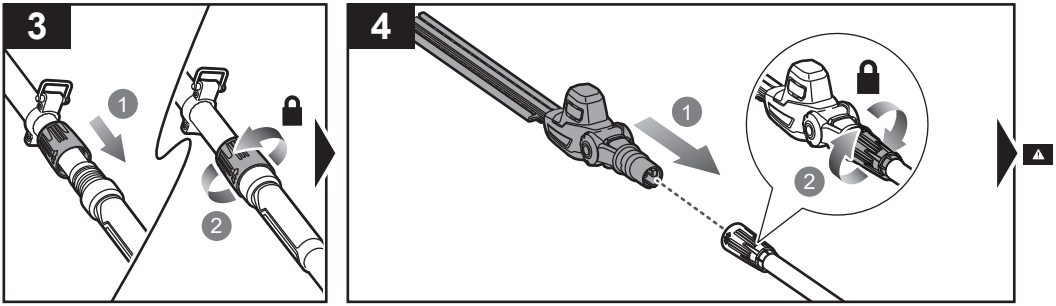
3
1
2
4
1
2

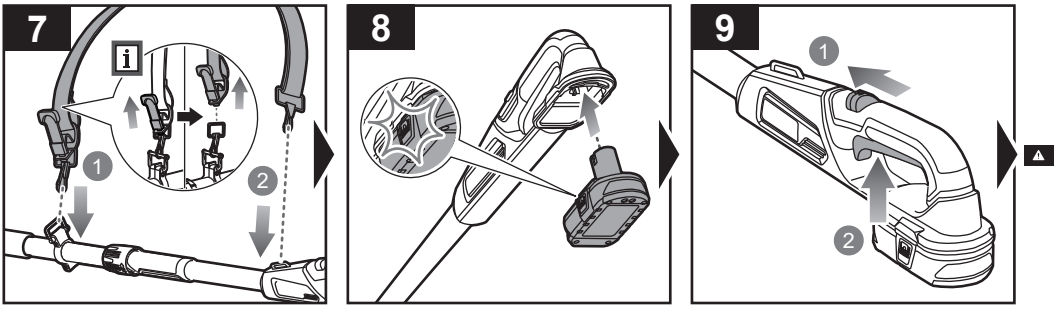
7
1
2
8
9
1
2

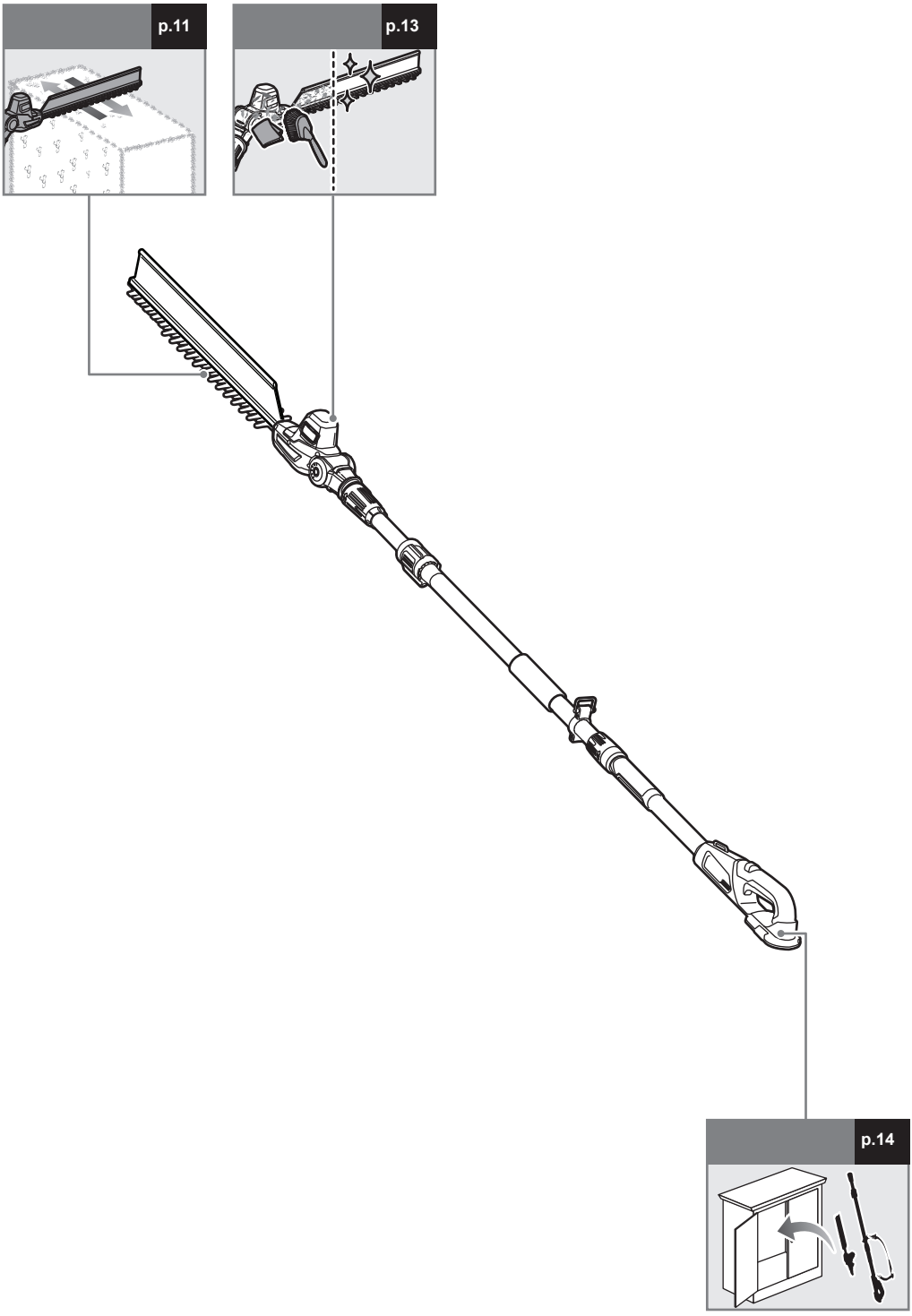
p.11
p.13
p.14

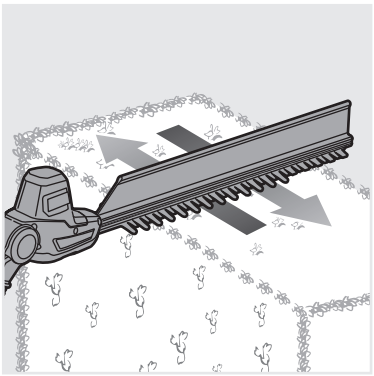

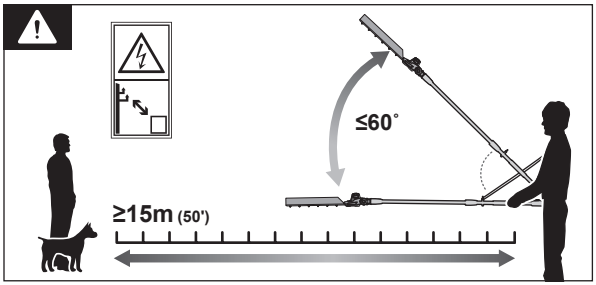
≤60˚
≥15m (50')

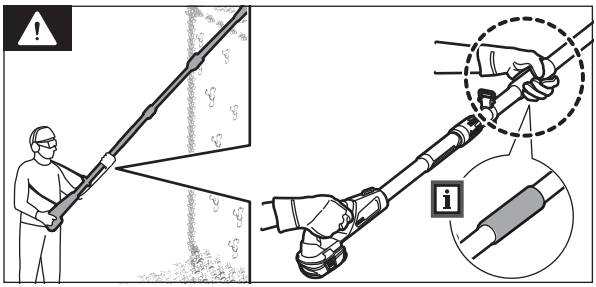

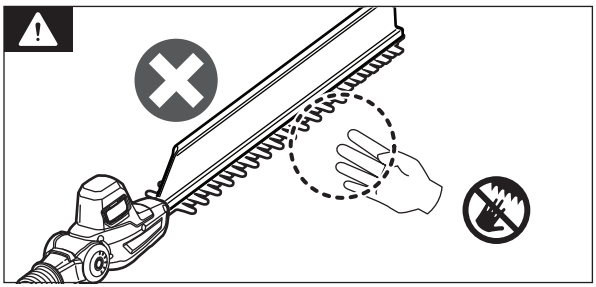

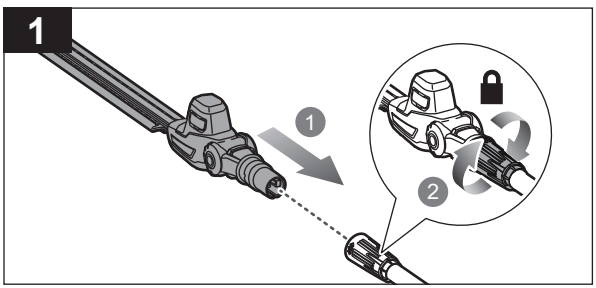
1
1
2

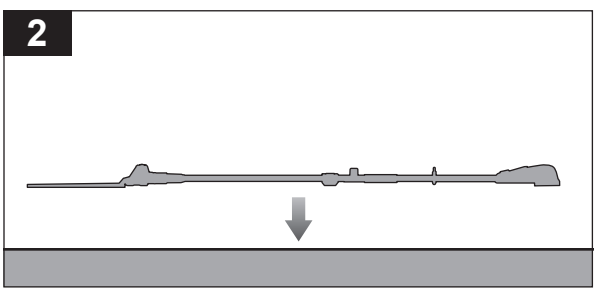
2

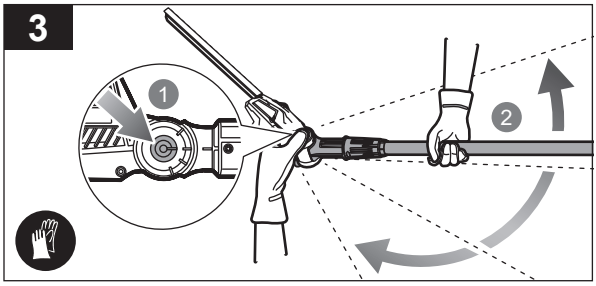
3
1
2

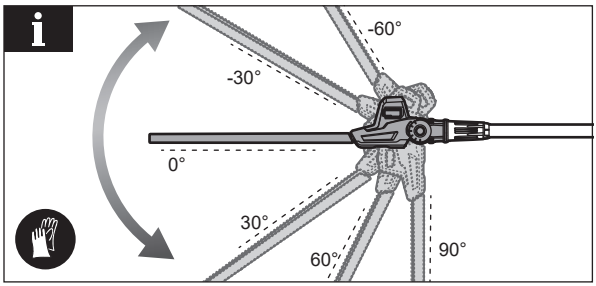
i
-60°
-30°
0°
30°
60°
90°

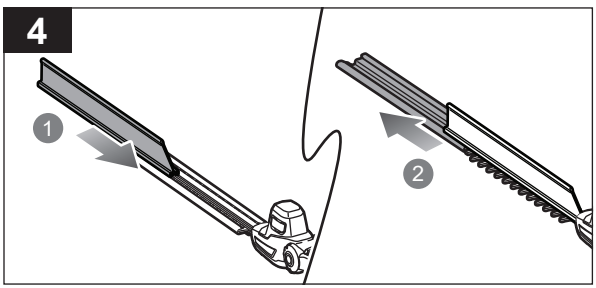
4
1
2

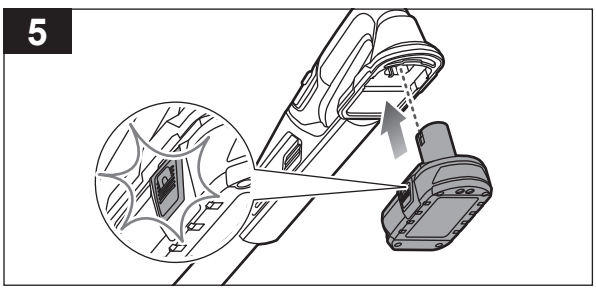
5

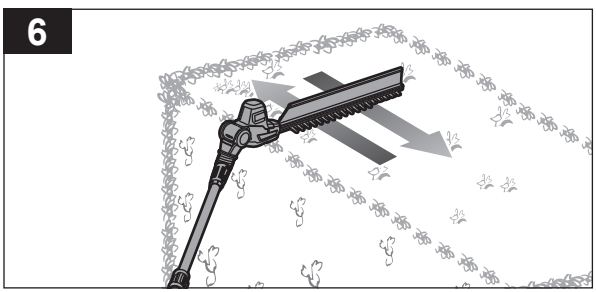
6

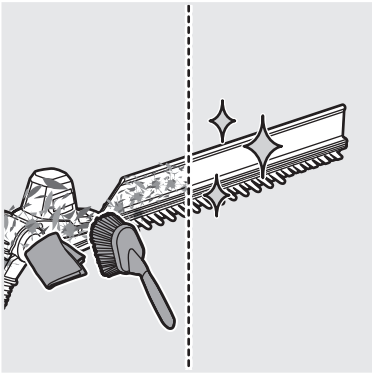

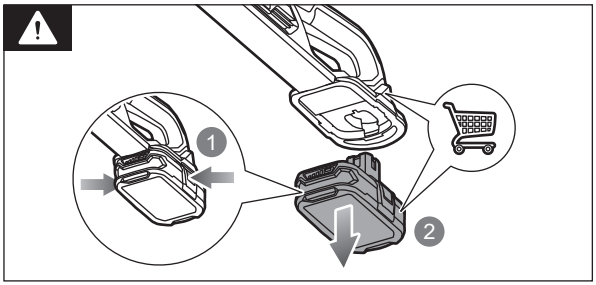
1
2

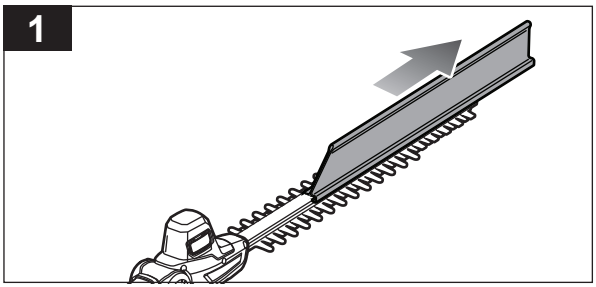
1

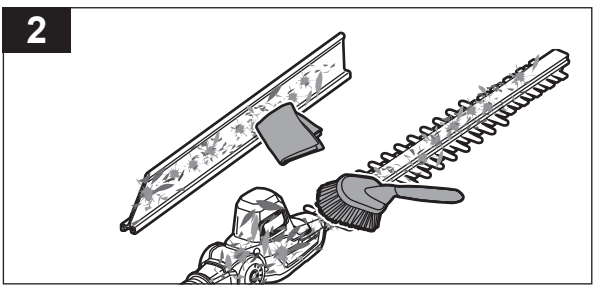
2

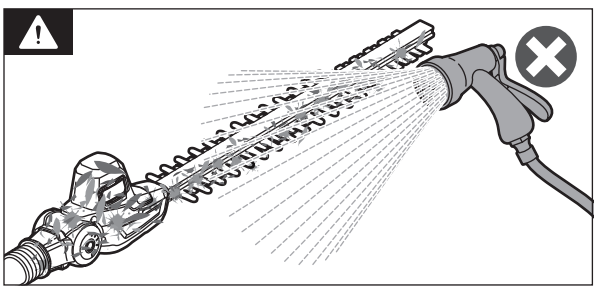

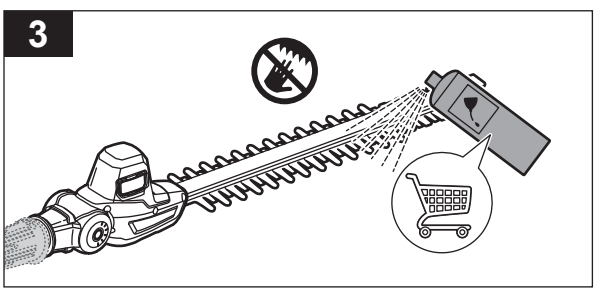
3

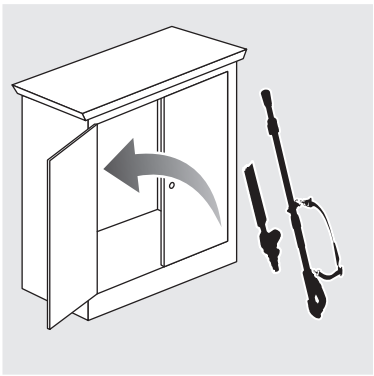

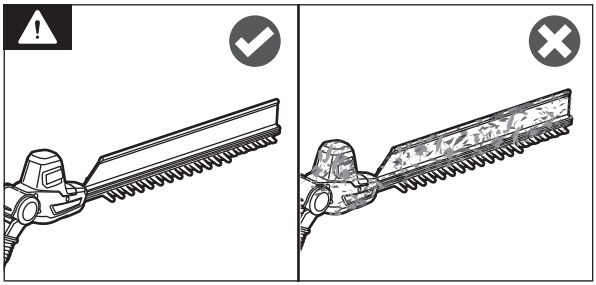

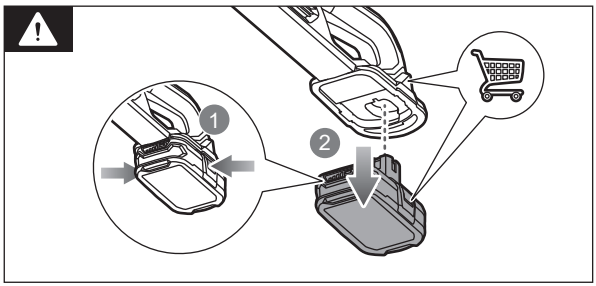

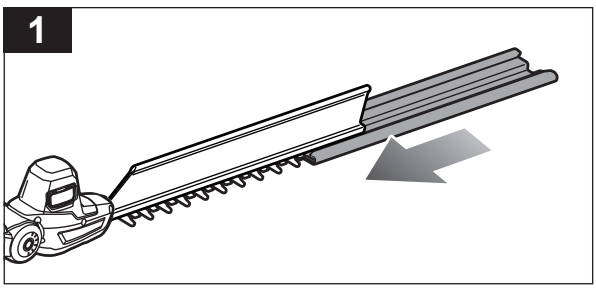

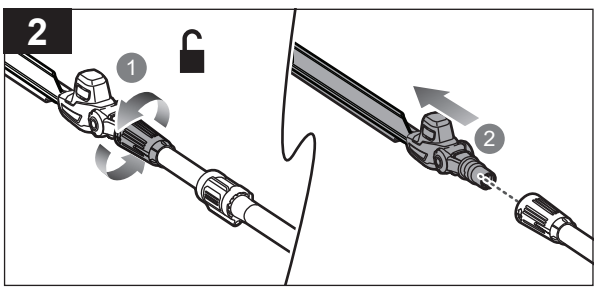

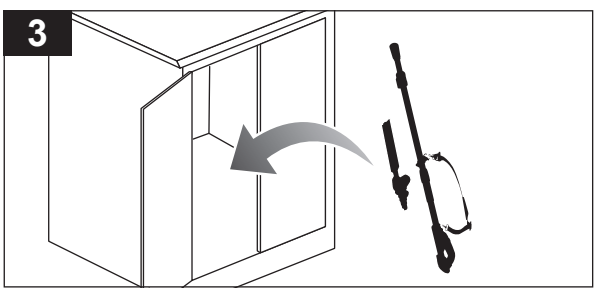

20250528v1

PRODUCT SPECIFICATIONS

Cordless pole hedge trimmer	
Model	RY18PHT40A
Rated voltage	18 V d.c.
No-load speed	1350 rpm
Blade length	400 mm
Cutting capacity	18 mm
Weight (without battery pack)	3.47 kg
Weight (with the heaviest battery pack)	4.67 kg
Vibration level (in accordance with EN 62841-1 and EN 62841-4-2)	
Front handle	0.77 m/s²
Rear handle	0.64 m/s²
Uncertainty	1.5 m/s²
Noise emission level (in accordance with EN 62841-1 and EN 62841-4-2)	
A-weighted sound pressure level	70.7 dB(A)
Uncertainty	3.0 dB
A-weighted sound power level	90.75 dB(A)
Uncertainty	1.54 dB
$L_{WA} + K_{WA}$	92 dB(A)
Compatible battery packs	RB18..
Compatible chargers	RC18..

⚠ **WARNING!** The declared vibration total values and the declared noise emission values given in this instruction manual have been measured in accordance with a standardised test and may be used to compare one tool with another. They may be used for a preliminary assessment of exposure.

The declared vibration and noise emission values represent the main applications of the tool. However, if the tool is used for different applications, used with different accessories, or poorly maintained, the vibration and noise emission may differ. These conditions may significantly increase the exposure levels over the total working period. An estimation of the level of exposure to vibration and noise should take into account the times when the tool is turned off or when it is running idle. These conditions may significantly reduce the exposure level over the total working period.

Identify additional safety measures to protect the operator from the effects of vibration and noise, such as maintaining the tool and the accessories, keeping the hands warm (in case of vibration), and organising work patterns.

RYOBI GUARANTEE APPLICATION CONDITIONS

In addition to any statutory rights arising from the purchase of a product and without prejudice on the statutory rights which apply independently and free of charge, all new RYOBI branded power tools and/or garden tools listed on our website, excluding tool accessories, tool storage systems, and spare parts, as further outlined under ("Product"), are covered by a voluntary guarantee issued by Techtronic Industries GmbH ("TTI") subject to the terms and conditions as stated below ("Guarantee").

The Guarantee is only applicable to purchaser(s) who purchase the products as end users in their capacity as consumers ("Consumer"). Retailers, rental companies, as well as professional end users are expressly excluded from these general terms and conditions of the Guarantee. For professional end users, a different type of voluntary guarantee may be applicable to certain product(s), if explicitly provided on the www.ryobitools.eu website. The invocation of this voluntary Guarantee does not limit the statutory legal rights of the Consumer in case of a defect.

1. The standard guarantee ("Standard Guarantee"), provided that the Product is purchased for private use only, has a term of 24 months ("Standard Guarantee Period") and commences on the date the product was purchased. This date must be documented by an invoice or other proof of purchase in order for the Standard Guarantee to be valid and enforceable. This Standard Guarantee also only applies to new Product(s).
2. Consumers in certain countries may be able to extend the Standard Guarantee for eligible Products beyond the period of the Standard Guarantee by registering on the www.ryobitools.eu website. The eligibility of Products for the extended guarantee ("Extended Guarantee") is specified on the packaging of a Product, on the website at www.ryobitools.eu, and/or is contained within the relevant Product documentation under https://www.ryobitools.eu/. In order to benefit from the Extended Guarantee, Consumers are required to register their Product(s) online within 30 calendar days from the date of purchase to benefit from this Extended Guarantee. All personal information of a Consumer will be processed in accordance with the privacy statement, which can be found here https://uk.ryobitools.eu/footer-links/privacy-policy/. The registration confirmation receipt, which is sent out by e-mail, and the original invoice showing the date of purchase will serve as proof of the Extended Guarantee.
3. The Standard Guarantee and the Extended Guarantee ("Guarantees") are limited to repair and/or replacement of the defective Product at the discretion of TTI provided that the defect in workmanship or material existed at the date of purchase. No further costs or losses can be claimed. In addition, the Guarantees do not apply to:
   - any damage caused accidentally, wilfully, or negligently by the Consumer
   - any damage to the Product that is the result of improper treatment or lack of maintenance
   - any Product that has been altered or modified
   - any Product where original identification (trade mark, serial number) markings have been defaced, altered or removed
   - any damage caused by non-observance of the instruction manual
   - Products, which are not subject to a CE/UKCA marking
   - any Product that has been attempted to be repaired by a non-authorised service centre or without prior authorisation by TTI
   - any Product connected to improper power supply (amps, voltage, frequency)
   - any Product used with inappropriate fuel mixture (fuel, oil, ratio of oil)
   - any damage caused by external influences (water, chemical, physical, shocks) or foreign substances
   - normal wear and tear of spare parts
   - inappropriate use, overloading of the Product(s)
   - use of non-approved accessories or parts
   - power tool accessories provided with the tool or purchased separately. Such exclusions including but not limited to screw driver bits, drill bits, abrasive discs, sand paper and blades, lateral guide
   - components (parts and accessories) which are subject to normal wear and tear, including but not limited to service and maintenance kits, carbon brushes, bearings, chuck, SDS drill bit attachment or reception, power cord, auxiliary handle, transport carry case, sanding plate, dust bag, dust exhaust tube, felt washers, impact wrench pins and springs, bump knobs, drive belts, clutch, blades of hedge trimmers or lawnmowers, harness, cable throttle, tines, felt washers, hitch pins, blower fans, blower and vacuum tubes, vacuum bag and straps, guide bars, saw chains, hoses, connector fittings, spray nozzles, wheels, spray wands, inner reels, outer spools, cutting lines, spark plugs, air filters, gas filters, mulching blades, etc.
4. For guarantee servicing, the Product(s) must be sent or presented without undue delay after occurrence or recognition of the defect in workmanship or material to an authorised RYOBI service partner listed on the following website https://www.ryobitools.eu/. Consumers can obtain the services under the Guarantees from a RYOBI service partner by
   a. contacting the retailer where the purchase was made; or
   b. registering via the service platform available on the RYOBI Commercial webpage https://www.ryobitools.eu/, the availability of the process might vary from country to country.
   When sending a Product to an authorised RYOBI service partner, the Product shall be safely packaged without hazardous contents (for details, please see the safety instructions on the website at https://www.ryobitools.eu/), marked with sender's address and accompanied by a short description of the defect. Please note that in some countries delivery charges or postage will have to be paid by the sender according to local practice. Please consult your local authorised RYOBI service centre to confirm whether such charges apply.
5. Upon receipt of the Product claimed to be defective by the Consumer, it will be inspected. When the defect has been confirmed, the services under the Guarantees will be provided by repairing the defective parts of the products or replacing them by non-defective parts at TTI's discretion. If TTI refuses to repair the defect or if, at TTI's discretion, the repair has failed, an equivalent replacement will be supplied. The replaced Product(s) or part(s) will become the property of TTI. Any repair/replacement(s) under the Guarantees above are free of charge. The repair/replacement(s) conducted by TTI do not constitute an extension or a new start of the Guarantees. The replaced spare parts are subject to the Guarantees originally given and the period for the Guarantees will end with period for the Guarantee that was originally given for the entire product.
6. The RYOBI Guarantees are granted by Techtronic Industries GmbH, Max-Eyth-Str.10, 71364 Winnenden, Germany, only to the Consumer that originally purchased the Product and may not be transferred or assigned.
7. The Guarantees are valid in the European Economic Area (EEA), Switzerland, and the United Kingdom. Outside these areas, please contact the retailer where the purchase was made to find out if another voluntary guarantee applies.

EU DECLARATION OF CONFORMITY

Manufacturer: Techtronic Industries GmbH
Max-Eyth-Straße 10, 71364 Winnenden, Germany

We declare as the manufacturer under our sole responsibility that the product mentioned below

Cordless pole hedge trimmer
Brand: RYOBI
Model number: RY18PHT40A
Serial number range: 50459101000001 - 50459101999999

fulfills all the relevant provisions of the following European Directives, European Regulations and harmonised standards:

2006/42/EC, 2014/30/EU, 2000/14/EC, 2005/88/EC, 2011/65/EU,
EN 62841-1:2015+A11:2022, EN 62841-4-2:2019+A1:2022+A11:2022,
EN IEC 55014-1:2021, EN IEC 55014-2:2021, EN IEC 63000:2018

Measured sound power level: 90.75 dB(A)
Guaranteed sound power level: 92 dB(A)
Conformity assessment method to Annex V Directive 2000/14/EC amended by 2005/88/EC.



Todd Chipner
Senior Vice President, Quality – Asia
Winnenden, Jun. 20, 2025

Authorised to compile the technical file:
Techtronic Industries GmbH
Max-Eyth-Straße 10, 71364 Winnenden, Germany

GB-DECLARATION OF CONFORMITY

Manufacturer: Techtronic Industries GmbH
Max-Eyth-Straße 10, 71364 Winnenden, Germany

We declare as the manufacturer under our sole responsibility that the product mentioned below

Cordless pole hedge trimmer
Brand: RYOBI
Model number: RY18PHT40A
Serial number range: 50459101000001 - 50459101999999

fulfills all the relevant provisions of the following Regulations: S.I. 2008/1597 (as amended), S.I. 2016/1091 (as amended), S.I. 2012/3032 (as amended), S.I. 2001/1701 (as amended) and that the following designated standards have been used:

BS EN 62841-1:2015+A11:2022, BS EN 62841-4-2:2019+A11:2022,
BS EN IEC 55014-1:2021, BS EN IEC 55014-2:2021,
BS EN IEC 63000:2018

Measured sound power level: 90.75 dB(A)
Guaranteed sound power level: 92 dB(A)
Conformity assessment method to S.I. 2001/1701 Schedule 8 (as amended)



Todd Chipner
Senior Vice President, Quality – Asia
Winnenden, Jun. 20, 2025

Authorised to compile the technical file:
Techtronic Industries (UK) Ltd
Parkway
Marlow Bucks SL7 1YL
UK

HEDGESWEEP is a trade mark of Techtronic Outdoor Products Technology Limited.
RYOBI is a trade mark of Ryobi Limited, and is used under license.

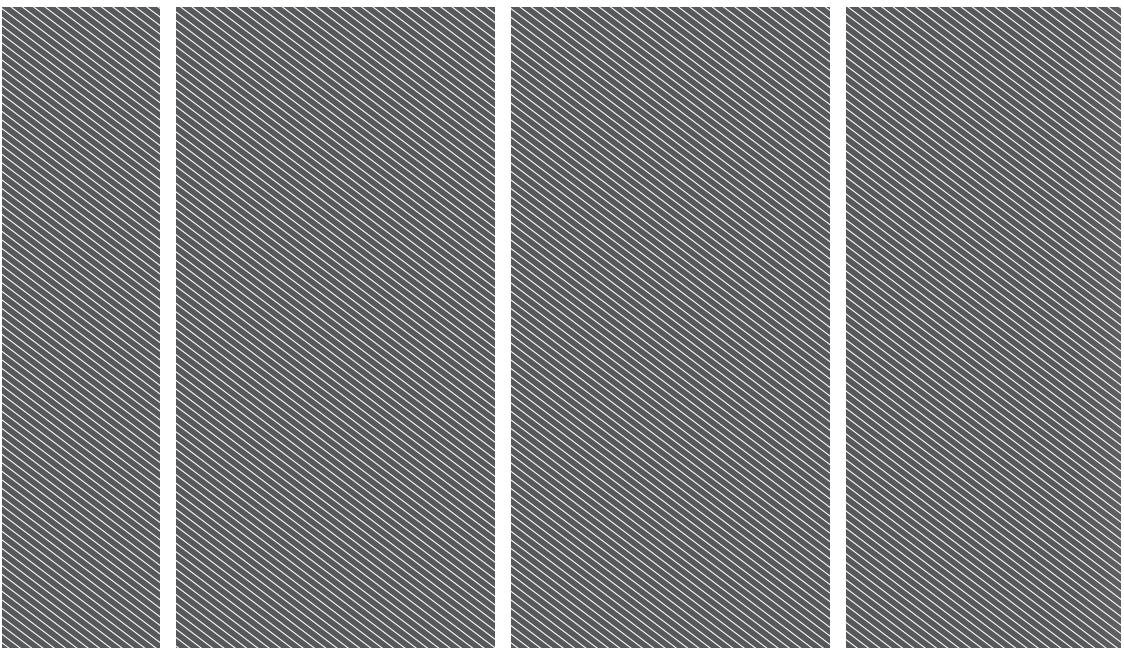

Techtronic Industries GmbH
Max-Eyth-Straße 10,
71364 Winnenden, Germany

Techtronic Industries (UK) Ltd
Parkway
Marlow Bucks SL7 1YL
UK

961087822-01