RSH2455 SILENT SHREDDER 2400W EU

5133001235 - RSH2455 - 4000444339



RYOBI

RSH2455

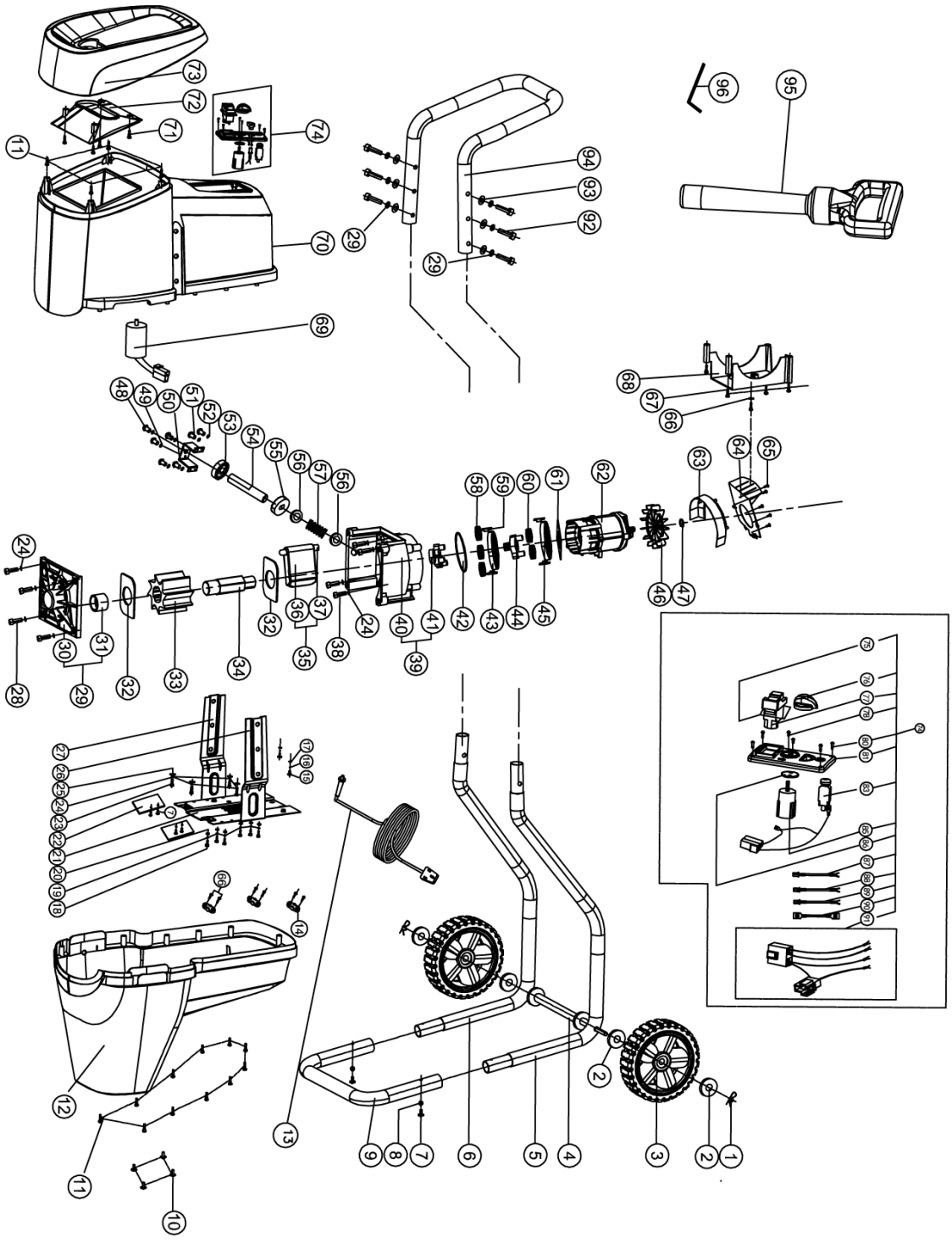

Position	Quantity	Description	Part number	EAN
001 1	2	BEARING BOLT	Item discontinued(5131004700)	
002 2	4	WASHER	Item discontinued(5131004701)	
003 3	2	WHEEL	Item discontinued(5131028815)	
004 4	1	AXLE	Item discontinued(5131028816)	
005 5	1	TUBE	Item discontinued(5131028817)	
006 6	1	TUBE	Item discontinued(5131028818)	
007 7	6	SCREW	Item discontinued(5131004704)	
008 8	2	WASHER	Item discontinued(5131004705)	
009 9	1	TUBE	Item discontinued(5131028819)	
010 10	4	Round screw /M5*12/Q235	Item discontinued(5131036585)	
011 11	15	SCREW RSH2455	Item discontinued(5131015716)	
012 12	1	HOUSING	Item discontinued(5131034653)	
013 13	1	POWER CORD	Item discontinued(5131004708)	
014 14	3	cord clamp	Item discontinued(5131036586)	
015 15	2	Hex. Screw/M6*10	Item discontinued(5131036587)	
016 16	2	Spring washer/Φ6	Item discontinued(5131036588)	
017 17	2	Flat washer/Φ6	Item discontinued(5131036589)	
018 18	6	HEX SCREW RSH2455	Item discontinued(5131004709)	
019 19	6	SPRING WASHER RSH2455	Item discontinued(5131004710)	
020 20	6	CHECKNUT RSH2455	Item discontinued(5131004711)	
021 21	1	BRACKET	Item discontinued(5131004712)	
022 22	2	CRANKCASE	Item discontinued(5131004713)	
023 23	4	SOCKET SCREW RSH2455	Item discontinued(5131004714)	
024 24	18	SPRING WASHER	Item discontinued(5131004715)	
025 25	4	WASHER	Item discontinued(5131004716)	
026 26	1	LEFT ARM OF BRACKET RSH2455	Item discontinued(5131004717)	
027 27	1	RIGHT ARM BRACKET RSH2455	Item discontinued(5131004718)	
028 28	4	SCREW	Item discontinued(5131021066)	
029 29	1	COVER OF BLADE HOUSING WITH HOLE DIA10MM	Item discontinued(5131032839)	
032 30	2	WASHER	Item discontinued(5131004720)	
033 31	1	PINION	Item discontinued(5131004721)	
034 32	1	SHAFT	Item discontinued(5131004722)	
035 33	1	KNIFE	5131032838	4058546138783
038 34	4	SCREW	Item discontinued(5131004724)	
039 35	1	BLADE HOUSING ASSEMBLY WITH HOLE DIA10MM	5131032840	4058546138790
042 36	1	O-RING	Item discontinued(5131004727)	
043 37	1	GEAR	Item discontinued(5131004728)	
044 38	1	INTERNAL GEAR	5131004729	4058546087562
045 39	1	INTERNAL GEAR RSH2455	Item discontinued(5131004730)	
046 40	1	BLOWER	5131004731	4058546087579
047 41	1	CIRCLIP	Item discontinued(5131004732)	
048 42	3	SCREW	Item discontinued(5131027691)	
049 43	3	SPRING	Item discontinued(5131004757)	
050 44	1	BRACKET	Item discontinued(5131004758)	
051 45	4	SCREW	Item discontinued(5131004759)	
052 46	4	WASHER	Item discontinued(5131004760)	
053 47	1	PLATE	Item discontinued(5131004761)	
054 48	1	SCREW	Item discontinued(5131004762)	
055 49	1	PLATE	Item discontinued(5131004763)	
056 50	2	WASHER RSH2455	Item discontinued(5131004764)	

Position	Quantity	Description	Part number	EAN
057 51	1	SPRING	Item discontinued(5131027690)	
058 52	3	GEAR	Item discontinued(5131004736)	
059 53	4	KEY	Item discontinued(5131004737)	
060 54	2	GEAR	5131004738	4058546087647
061 55	1	SQUARENESS WASHER RSH2455	Item discontinued(5131004739)	
062 56	1	MOTOR	Item discontinued(5131004740)	
063 57	1	FAN HOUSING	Item discontinued(5131004741)	
064 58	1	PLATE	Item discontinued(5131004742)	
065 59	5	S.T Screw/ST4.2*10	Item discontinued(5131036590)	
066 60	1	Flat washer/Φ4*Φ12	Item discontinued(5131036591)	
067 61	5	ST screw/ST4.2*15	Item discontinued(5131036592)	
068 62	1	Wiring protect board/PP	Item discontinued(5131036593)	
069 63	4	CAPACITOR	5131004743	4058546087661
070 64	1	HOUSING	Item discontinued(5131028821)	
071 65	4	SCREW RSH2455	Item discontinued(5131004745)	
072 66	1	COVER	5131004746	4058546087678
073 67	1	HOUSING	Item discontinued(5131028822)	
074 68	1	SWITCH ASSY HG W/O LIVETOOL INDICATOR	Item discontinued(5131032841)	
075 69	1	SWITCH SEAL	Item discontinued(5131021067)	
076 70	1	F/R SELECTION KNOB	Item discontinued(5131021068)	
077 71	1	SWITCH	Item discontinued(5131004749)	
078 72	2	Round screw/M3*10	Item discontinued(5131036594)	
080 73	4	Screw/ST3*12	Item discontinued(5131036595)	
081 74	1	PLATE	Item discontinued(5131036596)	
083 75	1	OVER LOAD PROTECTOR RSH2455	Item discontinued(5131004750)	
085 76	2	SWITCH RSH2455	Item discontinued(5131004752)	
086 77	1	Sealing Gasket for Rotation switch	Item discontinued(5131036597)	
087 78	1	Grey wire	Item discontinued(5131036598)	
088 79	1	WIRE - BLUE	Item discontinued(5131021070)	
089 80	1	WIRE - GREY	Item discontinued(5131021071)	
090 81	1	WIRE - GREY	Item discontinued(5131021072)	
091 82	1	CONNECTOR - 4 PIN	Item discontinued(5131021073)	
092 83	6	SCREW	Item discontinued(5131021074)	
093 84	6	Saddle washer/Φ8	Item discontinued(5131036599)	
094 85	6	TUBE	Item discontinued(5131028824)	
095 86	1	PLONGER	Item discontinued(5131004920)	
096 87	1	ALLEN KEY	5131004755	4058546087708