RYOBI

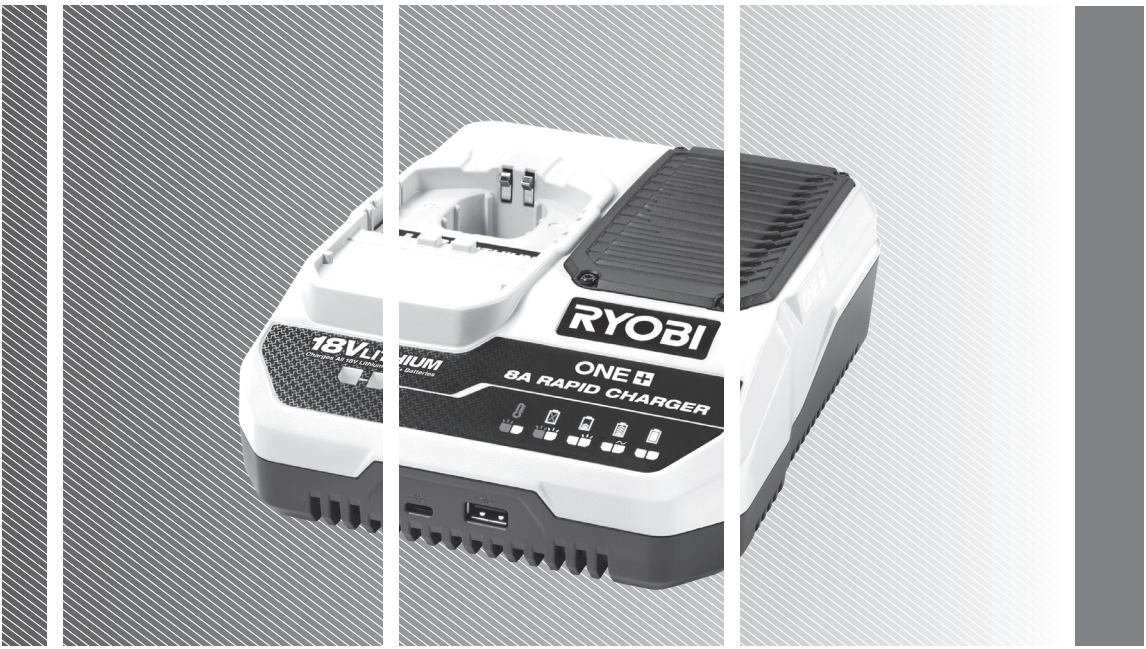

RC18180

IMPORTANT!

The product is not intended to be used or cleaned by persons with reduced physical, sensory, or mental capabilities, or lack of experience or knowledge, unless they have been given instructions concerning the safe use of the product by a person legally responsible for their safety. They should be supervised while using the product. Children shall not use, clean, or play with the product, which when not in use, should be secured out of their reach.

It is essential that you read the instructions in this manual before assembling, operating, and maintaining the product.

Subject to technical modifications.

Safety, performance, and dependability have been given top priority in the design of your battery charger.

INTENDED USE

The charger is intended only to charge the compatible battery packs listed in this manual.

Via USB connection, the product can charge USB devices.

The product is only for indoor use, in dry conditions.

The product is not intended to charge any other type of battery or be used as a power supply. It should never be used in explosive or flammable environments.

Do not use the product for any other purpose.

CHARGER SAFETY WARNINGS

- Read all safety warnings and all instructions. Failure to follow the warnings and instructions may result in electric shock, fire and/or serious injury.
- Do not recharge primary cells (non-rechargeable).
- The product must not be damp and should never be used in a damp environment.
- The product is for indoor use only.
- Do not cover any ventilation slots, and provide adequate ventilation during operation.
- Mains voltage must correspond with the voltage specifications on the product.
- Before using the product, check that the charger enclosure, cable, and plug are not damaged. If damage is found, do not use the product and bring it to an authorised service centre for repair.
- Do not use the product if it has suffered any heavy shock or jolting, or if it is damaged in any other way.
- When charging, do not expose the product to sunlight or other heat source. The recommended temperature range at charging vicinity is 10° to 25°C.
- Due to the heat generated during charging, do not use the product on a combustible surface.
- Do not use the product near flammable materials, such as cloth, packaging materials, paint, spray paint or aerosols, lubricants, thinners, petrol containers, gas containers, or gas appliances.
- Never modify, disassemble, or attempt to repair the product yourself.
- Do not allow the charger or battery packs to become contaminated with any material that could be conductive, such as metallic particles from grinding, cutting, or machining processes.
- Protect the battery contact terminals from metallic objects to avoid a short circuit, which can cause fire or explosion.
- Unplug the product from the power socket when it is not in use or when cleaning it.
- Use only an extension cable that is approved and in good condition.
- Do not charge battery packs that show signs of leaks. Dispose of them properly.
- Never charge a damaged battery pack. Replace damaged battery packs immediately.
- Before every use, examine the supply cord for damage. If there are signs of damage, it must be replaced by a qualified person at an authorised service centre to avoid a hazard.

ADDITIONAL BATTERY SAFETY WARNINGS

To reduce the risk of fire, personal injury, and product damage due to a short circuit, never immerse your tool, battery pack or charger in fluid or allow a fluid to flow inside them. Corrosive or conductive fluids, such as seawater, certain industrial chemicals, and bleach or bleach-containing products, etc., can cause a short circuit.

WALL MOUNTING

- Carefully select a stable wall for mounting the charger. Make sure that there is no hindrance to mounting work or operation. The maximum gross weight of the charger is approximately 2.7 kg, provide sufficient reinforcement for the wall if necessary.
- Mount the charger in a vertical orientation only. Install two screws on the wall to mount the charger. Otherwise, the charger may fall and cause serious injury.
- Check the tightness of the screws on a regular basis. Make sure that the head of the screws fit properly in the wall mounting holes to hold the charger firmly in place. Otherwise, the charger may fall because of loose screws.

OPERATION

CHARGING THE BATTERY PACK

- Battery packs are shipped in a low charge condition. Therefore, you should charge them before first use. If the charger does not charge the battery pack under normal circumstances, bring both the battery pack and charger to an authorised service centre.
- Make sure that the power supply is normal household voltage, 220–240V, 50 Hz, AC only.
- Make sure that the battery pack latch clicks into place and that the battery pack is secured in the charger before charging.

NOTE: The charging times listed on the compatible battery packs table can vary depending on the type of the battery pack used. (e.g., RB18L40, RB1840X, RB1840T)

NOTE: When the battery becomes fully charged, the green LED remains on. It is normal for the battery pack to become slightly warm to touch while charging.

NOTE: When charging, the charger and battery pack should be placed in a location where the temperature is more than 10°C but less than 25°C.

CHARGING A COOL BATTERY PACK

1. Insert the battery pack into the charging port. Make sure that the battery pack latch clicks into place.
2. Connect the product to a power supply.
3. Disconnect the product from the power supply when the battery pack becomes fully charged.

4. Press the battery pack latches to unlock the battery pack from the product.
5. Remove the battery pack from the product.

CHARGING A HOT BATTERY PACK

When using a tool continuously, the cells in the battery pack become hot. A hot battery pack should be allowed to cool down for approximately 30 minutes before recharging.

MAINTENANCE

- When not using or when cleaning the product, disconnect it from the power supply and remove the battery pack.
- Avoid using solvents when cleaning plastic parts. Most plastics are susceptible to various types of commercial solvents. Use clean cloth or soft brush to remove dirt and dust.
- Do not, at any time, let brake fluids, gasoline, petroleum-based products, and penetrating oils come in contact with plastic parts. These products contain chemicals that can damage, weaken, or destroy plastic.
- Hazardous voltages are present within the product; do not disassemble.

CLEANING THE CHARGER

- Unplug the charger power cord from the power supply before cleaning to prevent serious personal injury.
- Clean the charger surface (except labels) using a damp cloth with a mild detergent.
- Do not use any strong detergents on the plastic housing. They can be damaged by certain aromatic oils, such as pine and lemon, and by solvents such as kerosene.
- Moisture can cause a shock hazard. Wipe off any moisture with a soft dry cloth.

STORAGE

- Store the product in a cool dry place between 10°C and 38°C.

SYMBOLS ON THE PRODUCT

V	Volts
⎓	Direct current
∿	Alternating current
	Regulatory Compliance Mark (RCM). Product meets applicable regulatory requirements.
	Class II equipment
	Please read the instructions carefully before starting the product.
	For indoor use only.
	Time-lag fuse 5A



Do not dispose of waste electrical and electronic equipment as unsorted municipal waste. Waste electrical and electronic equipment must be collected separately. Waste light sources have to be removed from the equipment. Check with your local authority or retailer for recycling advice and collection point. According to local regulations, retailers may have an obligation to take back waste electrical and electronic equipment free of charge. Your contribution to the reuse and recycling of waste electrical and electronic equipment helps to reduce the demand of raw materials. Waste electrical and electronic equipment contain valuable and recyclable materials, which can adversely impact the environment and the human health if not disposed of in an environmentally compatible manner. Delete personal data from waste equipment, if any.

COMPATIBLE BATTERY PACKS

Battery Pack	Voltage	Charger Input	Battery type	Battery Capacity	Number of Cell for Battery
RB18L15	18 V ⎓	220 - 240V ∿ 50 Hz	Lithium-Ion	1.5 Ah	5
RB18L15A				1.5 Ah	5
RB18L15B				1.5 Ah	5
RB1815C				1.5 Ah	5
RB18L20				2.0 Ah	5
RB18L20A				2.0 Ah	5
RB1820C				2.0 Ah	5
RB18L25				2.5 Ah	5
RB18L25A				2.5 Ah	5
RB1825C				2.5 Ah	5
RB18L40				4.0 Ah	10
RB18L40A				4.0 Ah	10
RB1840C				4.0 Ah	10
RB18L50				5.0 Ah	10
RB18L50A				5.0 Ah	10
RB1850C				5.0 Ah	10
RB1860X				6.0 Ah	10
RB18L90A				9.0 Ah	15

CHARGER LED FUNCTIONS

LED indicator		Battery pack status	Red LED	Green LED	Action
	Evaluate	Hot battery pack	Flashing	OFF	When battery pack reaches cooled temperature, charger begins fast charge mode.
	Evaluate	Cold battery pack	Flashing	OFF	When battery pack reaches warmed temperature, charger begins fast charge mode.
	Defective	Defective	Flashing	Flashing	Battery pack or charger is defective.
	• If defective, try to repeat the conditions a second time by removing and reinstalling the battery pack. If the LED status repeats a second time, try charging a different battery. • If a different battery charges normally, dispose of the defective pack (see Maintenance section). • If a different battery also indicates “Defective,” the charger may be defective.				
	Charging	Fast charging	OFF	Flashing	Battery pack is being charged.
	Charging	Taper charging	OFF	Fading	Battery pack is being charged at lower rate.
	Full	Fully charged	OFF	ON	Charging is complete.

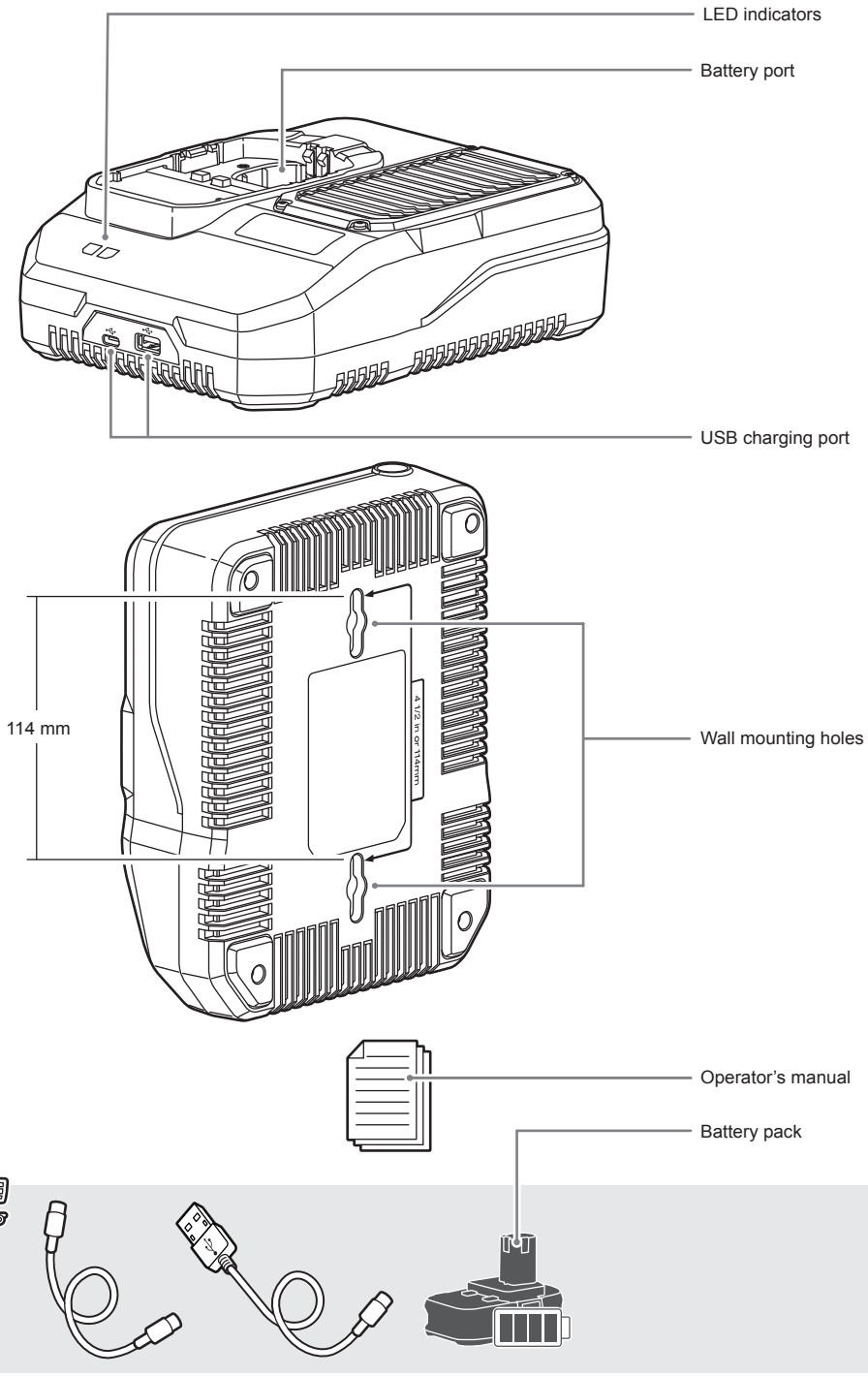
LED indicators
Battery port
USB charging port
114 mm
4 1/2 in or 114mm
Wall mounting holes
Operator’s manual
Battery pack

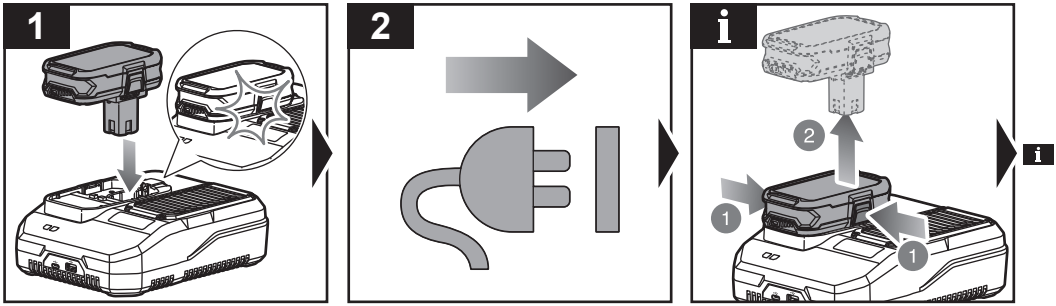

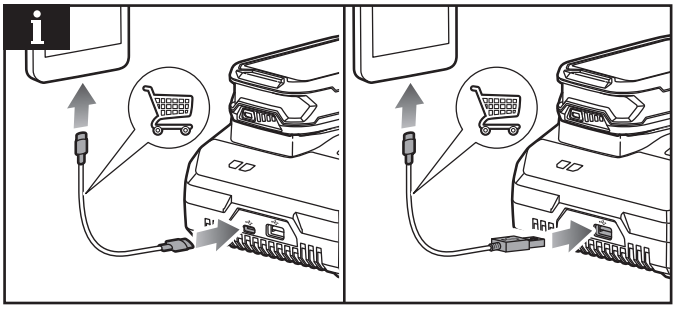

20260417v2

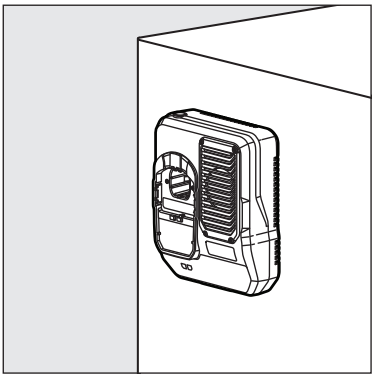

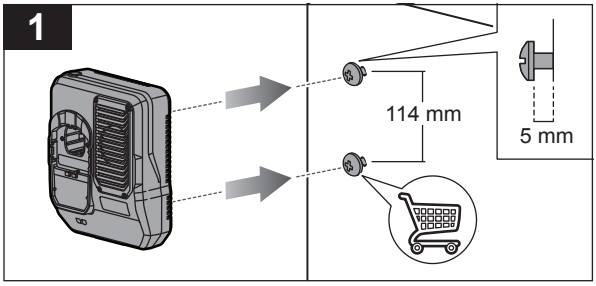
1
114 mm
5 mm

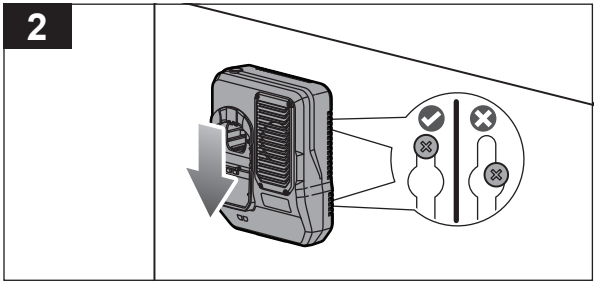
2

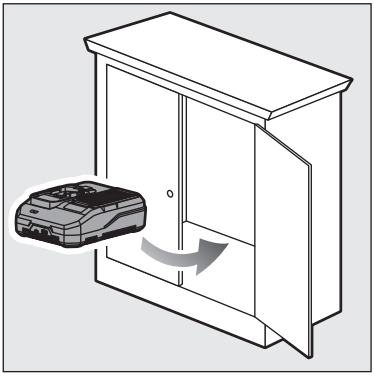

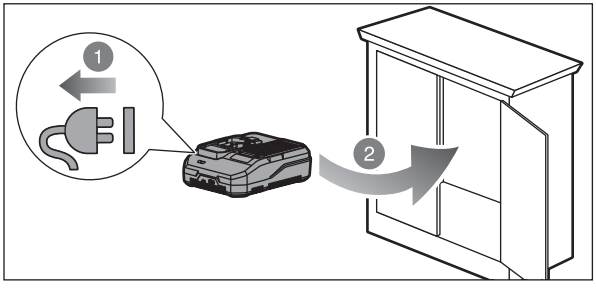
1
2

PRODUCT SPECIFICATIONS

Charger	
Model	RC18180

Charger	
Input	220 - 240V ∿ 50 Hz
Output	18 V ⎓
Input power	230 W
Charger output current	8 A
Weight - excluding battery pack	1.2 kg
USB charging	
Output voltage	5 V
Maximum output current	2.0 A(USB-A) 3.0 A(USB-C)
Type	USB-A USB-C

Battery Pack	
Voltage	18 V ⎓
Battery type	Lithium-Ion
Operating temperature	5°C - 40°C

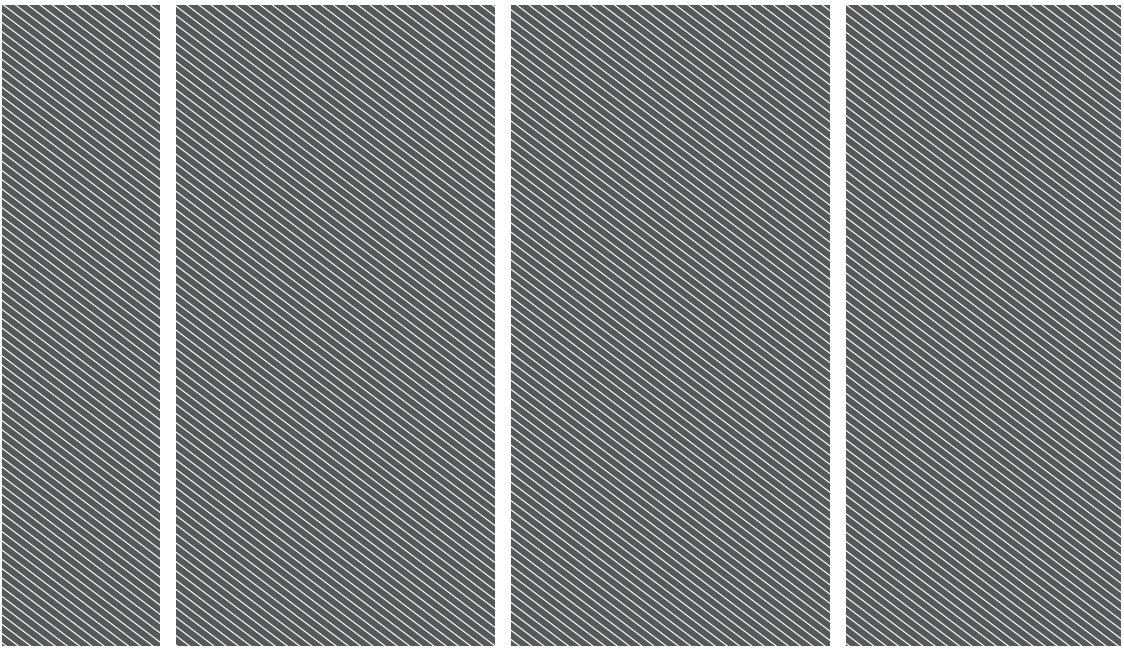

Imported by:
Techtronic Industries Australia Pty Ltd
47 Gilby Road, Mount Waverley,
VIC 3149, Australia
www.ryobi.com.au

Techtronic Industries N.Z. Limited
Unit C, 70 Business Parade South,
Highbrook, Auckland 2013, New Zealand
www.ryobi.co.nz

RYOBI is a trade mark of Ryobi Limited, and is used under license.

961014934-02