ORIGINAL INSTRUCTIONS

Cordless Lawnmower

RY18LMX37A



Important!

It is essential that you read the instructions in this manual before assembling, operating, and maintaining the product.

Subject to technical modification.

Safety, performance, and dependability have been given top priority in the design of your cordless lawnmower.

INTENDED USE

The cordless lawnmower is intended for outdoor use only.

The product is designed for domestic lawn mowing. The cutting blade should rotate approximately parallel to the ground over which it is being wheeled. All four wheels should touch the ground while mowing. It is a pedestrian-controlled walk-behind lawnmower designed to be pushed by hand.

The product should never be operated with the wheels off the ground. It should not be pulled or ridden on. It should not be used to cut anything other than domestic grass lawns.

Do not use the product for any other purpose.

GENERAL SAFETY WARNINGS

⚠ WARNING

When using the product, the safety rules must be followed. For your own safety and that of bystanders, please read these instructions before operating the product. Please keep the instructions safe for later use.

⚠ WARNING

The product should be operated only with the battery packs specified in this manual. When using a battery-operated product, basic safety precautions should always be followed to reduce the risk of fire, leaking batteries, and personal injury.

PERSONAL SAFETY

- The product is capable of amputating hands and feet, and of throwing objects. Failure to observe all safety instructions could result in serious injury or death.
- Be familiar with the controls and the correct use of the product.
- Never allow children or people with reduced physical, sensory, or mental capabilities or persons who are not familiar with these instructions to operate, clean, or maintain the product. Local regulations may restrict the age of the operator. Children should be adequately supervised to ensure they do not play with the product.
- Stay alert, watch what you are doing, and use common sense when operating the product. Do not operate the product while tired, ill, or under the influence of drugs, alcohol, or medication. A lapse in concentration while operating the product may result in serious personal injury.
- Wear heavy, long trousers, long sleeves, and sturdy anti-slip footwear. Do not wear short trousers, sandals, or go barefoot. Avoid wearing clothing that is loose-fitting or that has hanging cords or ties.
- Always wear safety glasses with side shields.
- Always be sure of your footing especially on slopes. Keep firm footing and balance. Walk, never run.
- Use the product across the face of slopes, never up and down. Exercise extreme caution when changing direction on slopes.
- Do not use the product near drop-offs, ditches, excessively steep slopes, or embankments. Poor footing could cause a slip and fall accident.

WORK AREA SAFETY

- Never use product while people, especially children, or pets are within 15 m because of the danger of objects being thrown by contact with the blade.
- Objects struck by the lawnmower blade can cause severe injuries to persons. Thoroughly inspect the area where the product is to be used and remove all rocks, sticks, metal, wire, bones, toys, or other foreign objects. Remember, string or wire may entangle with the cutting means.
- Always use the product in the daylight or with good artificial light.
- Do not operate the product in explosive atmospheres, such as in the presence of flammable liquids, gases, or dust. The product creates sparks which may ignite the dust or fumes.
- Do not operate the product on wet grass or in the rain.
- Do not use the product when there is a risk of lightning.
- Keep in mind that the operator or user

is responsible for accidents or hazards occurring to other people or their property.

- Tragic accidents can occur if the operator is not alert to the presence of children. Children are often attracted to the product and the mowing activity. Never assume that children will remain where you last saw them.
- Keep children out of the mowing area and under the watchful care of a responsible adult other than the operator. Be alert, and turn the product off if a child enters the area.
- Use extra care when approaching blind corners, shrubs, trees, or other objects including overhanging shrubs, which may block your view.

BATTERY TOOL USE AND CARE

- Read, understand, and always follow the safety instructions that came with your battery and charger. Failure to do so may result in electric shock, fire or other hazardous situations. Keep all the instructions together in a safe place for future reference.
- Battery-operated products do not have to be plugged into an electrical outlet; therefore, they are always in operating condition. Remove the isolator key whenever you are not operating the product.
- Remove the battery pack before making any adjustments, cleaning, or removing material from the product.
- Ensure that the isolator key is removed before inserting battery pack.
- A battery pack must be recharged only with the charger specified by the manufacturer. Using a charger with an incompatible battery pack may create a risk of fire. Use battery pack only with charger listed.
- Use only battery pack intended specifically for the product. Use of any other battery packs may result in a risk of fire, electric shock, or injury to persons.
- When battery pack is not in use, keep it away from other metal objects like, paper clips, coins, keys, nails, screws, or other small metal objects, that can make a connection from one terminal to another. Shorting the battery pack terminals together may cause sparks, burns, fire or explosion.
- Do not place battery products or their batteries near fire or heat. This increases the risk of explosion and possibly injury.
- Do not open or mutilate the battery pack. Released electrolyte is corrosive and may cause damage to the eyes or skin. It may be toxic if swallowed.
- Protect the battery pack against moisture and water. Do not charge the product in a damp or wet location. Following this rule will reduce the risk of electric shock.
- In case of damage and improper use of the battery, vapour may be emitted. Provide for fresh air, and seek medical help in case of complaints. The vapour can irritate the respiratory system.
- Do not leave the battery pack inside a vehicle in hot or cold conditions.
- Do not incinerate the battery.
- Under abusive conditions, liquid may be ejected from the battery; avoid contact. If contact accidentally occurs, flush with water. If liquid contacts eyes, additionally seek medical help. Liquid ejected from the battery may cause irritation or burns.

CORDLESS LAWNMOWER SAFETY WARNINGS

- Before use, always visually inspect to ensure that blades, blade bolts, and cutter assembly are not worn or damaged.
- Replace worn or damaged blades and bolts in sets to preserve balance.
- The blade on the product is sharp. Use extreme caution and wear heavy-duty gloves when fitting, replacing, cleaning, or checking bolt security.
- Bring the product to an authorised service centre to replace damaged or unreadable labels.
- Check all nuts, bolts, and screws at frequent intervals for proper tightness to be sure that the product is in safe working condition.
- Frequently check the grass catcher for wear, holes, or deterioration.
- Replace worn or damaged parts before operating the product.
- The product must be started with the user behind the handlebars in the operator safety zone. Never start the product if:

- not all four wheels are on the ground
- the grass discharge chute is exposed and is not protected by the grass catcher and grass discharge chute cover
- hands and feet of all persons are not clear of the cutting enclosure

- Never operate the product if the on/off switch on the handlebar does not properly start and stop the product.
- Never attempt to lock the on/off switches in the on position. This is extremely dangerous.
- Do not force the product. It will do the job better and safer at the speed for which it was designed.
- Stop the blade when crossing gravel surfaces.
- Do not pull the product backwards unless absolutely necessary. If you must back the product away from a wall or obstruction, first look down and behind to avoid tripping or pulling the product over your feet.
- Turn off the motor and allow the blade to stop if the product has to be tilted for transportation when crossing surfaces other than grass, and when transporting the product to and from the work area.
- Never use the product with defective guards or shields, or without safety devices, such as deflectors or grass collectors, in place.
- Do not tilt the product when turning on the motor or while the motor is running. If absolutely necessary, you may raise the front of the lawnmower by no more than 5 cm to enable easier starting. Press down on the handlebar to achieve this. Always return the lawnmower to its normal position with all wheels on the ground before cutting. Tilting the lawnmower exposes the blade and increases the probability of objects being thrown and accidental contact with the blade.
- Turn on the motor carefully according to instructions, and keep hands and feet away from blades. Do not put hands or feet near or under rotating parts.
- Never pick up or carry the product while it is running.
- Turn off the product, and remove the isolator key and the battery pack. Make sure that all moving parts have come to a complete stop:
  - whenever leaving the product unattended (including disposal of grass clippings)
  - before clearing blockages or unclogging discharge chute
  - before checking, cleaning, or working on the product
  - before removing the grass catcher or opening the grass discharge chute cover
  - after striking a foreign object; inspect the product for damage and make repairs as necessary before restarting and operating the product
  - If the product starts to vibrate abnormally (check immediately)
    - inspect for damage, particularly the blades
    - replace or repair any damaged parts
    - check for and tighten any loose parts
- Avoid holes, ruts, bumps, rocks, property stakes, or other hidden objects. Uneven terrain could cause a slip-and-fall accident.
- Always ensure that the motor control cable is never trapped, pinched, or damaged during assembly or when folding the handle.

ADDITIONAL BATTERY SAFETY WARNINGS

⚠ WARNING

To reduce the risk of fire, personal injury, and product damage due to a short circuit, never immerse your tool, battery pack or charger in fluid or allow a fluid to flow inside them. Corrosive or conductive fluids, such as seawater, certain industrial chemicals, and bleach or bleach-containing products, etc., can cause a short circuit.

PRODUCT FEATURES

OVERLOAD AND OVERHEAT PROTECTION

The product has an overload protection device. When overloading is detected, the product will automatically turn off. If the overload protector is actuated, the on/off lever must be released. Press the start button and squeeze the on/off lever to restart the product. If the product still does not turn on, reinstall the battery pack.

The battery pack has overheat protection.

Excessive temperatures will cause the battery to stop powering the product. If the battery pack is too warm, allow it to cool down before resuming operation. If the product still does not work, recharge the battery pack.

NOTE: The battery pack LED indicator will not work if the battery protection feature has caused the battery pack to stop powering the product. Turn off the product or remove the battery pack from the product and the battery pack LED indicator will resume normal function.

ON/OFF LEVER

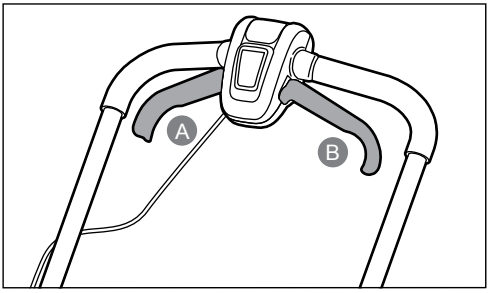

Press the start button and then squeeze the on/off lever (A or B) to start the product. Release the start button and keep squeezing the on/off lever to run the blade. Release the on/off lever to stop the blade.

GENERAL MOWING TIPS

The run time of the battery depends on the condition, length, and density of the grass.

Adjust the cutting height of the lawnmower to suit the current condition of the lawn.

- For best performance, always cut off one-third or less of the total height of the grass.
- When cutting long grass, reduce walking speed to allow for more effective cutting and a proper discharge of the clippings.
- Do not cut wet grass. Wet grass sticks to the underside of the deck and prevent proper collection or discharge of grass clippings.
- New or thick grass may require a higher cutting height.
- To collect the grass cuttings for disposal, remove the mulching plug and fit the grass catcher, making sure that the grass discharge chute cover is properly closed. Empty the grass catcher regularly; otherwise, the discharge chute will become blocked with grass cuttings.
- If you are making a light cut and wish for the grass cuttings to remain on the lawn, fit the mulching plug, and close the grass discharge chute cover to cover the discharge opening. It is not necessary to fit the grass catcher in this case.
- The product is designed to operate and cut most effectively when moving forwards.
- A higher cutting height extends the run time of the battery pack.

TRANSPORTATION AND STORAGE

- Turn off the product, and remove the isolator key and the battery pack. Make sure that all moving parts have come to a complete stop. Allow the product to cool down before storing or transporting.
- Clean all foreign materials from the product. Store the product in a cool, dry, and well-ventilated place that is inaccessible to children. Keep the product away from corrosive agents such as garden chemicals and de-icing salts. Do not store the product outdoors.
- For transportation in vehicles, remove the isolator key, and secure the product against movement or falling to prevent injury to persons or damage to the product.

⚠ WARNING

Use extreme caution when lifting or tilting the product for maintenance, cleaning, storage, or transportation. The blade is sharp. Keep all body parts away from the blade while it is exposed.

TRANSPORTING LITHIUM BATTERIES

Transport the battery in accordance with local and national provisions and regulations.

Follow all special requirements on packaging and labelling when transporting batteries by a third party. Ensure that no batteries can come in contact with other batteries or conductive materials while in transport by protecting exposed connectors with insulating, non-conductive caps or tape. Do not transport batteries that are cracked or leaking. Check with the forwarding company for further advice.

MAINTENANCE

⚠ WARNING

Use only original manufacturer's replacement parts, accessories and attachments. Failure to do so can cause possible injury, can contribute to poor performance, and may void your warranty.

⚠ WARNING

Servicing requires extreme care and knowledge and should be performed only by a qualified service technician. Have the product serviced by an authorised service centre only. When servicing, use only original replacement parts.

- Turn off the product, and remove the isolator key and the battery pack. Make sure that all moving parts have come to a complete stop before any cleaning or maintenance task.
- You may make adjustments and repairs described in this manual. For other repairs, contact an authorised service centre.
- Replace worn or damaged part for safety.
- Check the grass catcher frequently for wear or deterioration.
- After each use, clean the product with a soft, dry cloth. Any part that is damaged should be properly repaired or replaced by an authorised service centre.
- Check all nuts, bolts, and screws at frequent intervals for proper tightness to ensure the product is in safe working condition.
- Be careful during adjustment of the product to prevent entrapment of the fingers between moving blades and fixed parts of the product.
- When servicing the blades, be aware that even though the power source is turned off, the blades can still be moved.
- The blade on the product is sharp. Use extreme caution, and wear heavy-duty gloves when fitting, replacing, cleaning, or checking bolt security.
- Replace damaged blades and bolts in sets to preserve balance.
- The blade bolts must be adequately tightened. See the manufacturer's recommendations for blade bolt torque, which can be found in the product specification table in this manual.

CLEARING BLOCKAGES

- Turn off the product, and remove the isolator key and the battery pack. Make sure that all moving parts have come to a complete stop.
- Always wear heavy-duty gloves when checking or clearing a blockage. The blades are sharp and the blockage itself could be a sharp object.
- Remove the grass catcher, check for and carefully clear obstructions.
- Check the grass discharge chute, and carefully clear blockages.
- Turn the product on its side. Check its underside and the area around the blade. If any blockages are found, remove carefully. Remember, the blade may move during cleaning.

RESIDUAL RISKS

Even when the product is used as prescribed, it is still impossible to completely eliminate certain residual risk factors. The following hazards may arise during use, and the operator should pay special attention to avoid the following:

- injury caused by vibration
  - Always use the right tool for the job. Use designated handles and restrict working time and exposure.
- injury caused by noise
  - Exposure to noise can cause hearing injury. Wear ear protection and limit exposure.
- injury from contact with the blades
- injury caused by thrown objects

RISK REDUCTION

It has been reported that vibrations from handheld tools may contribute to a condition called Raynaud's Syndrome. Symptoms may include tingling, numbness and blanching of the fingers, usually apparent upon exposure to cold. Hereditary factors, exposure to cold and dampness, diet, smoking and work practices are all thought to contribute to the development of these symptoms. There are

measures that can be taken by the operator to possibly reduce the effects of vibration:

- Keep your body warm in cold weather. When operating the product, wear gloves to keep the hands and wrists warm. It is reported that cold weather is a major factor contributing to Raynaud's Syndrome.
- After each period of operation, exercise to increase blood circulation.
- Take frequent work breaks. Limit the amount of exposure per day.

If you experience any of the symptoms of this condition, immediately discontinue use and see your physician.

⚠ WARNING

Injuries may be caused, or aggravated, by prolonged use of a tool. When using any tool for prolonged periods, ensure you take regular breaks

KNOW YOUR PRODUCT

See page 10.

1. Start button
2. On/off lever
3. Handle
4. Handle lock
5. Grass catcher
6. Quick release fastener
7. Cutting height adjustment lever
8. Rear wheel
9. Front wheel
10. Charger
11. Battery
12. Mulching plug
13. Isolator key
14. Battery door
15. Motor control cable retainer
16. Motor control cable

SYMBOLS ON THE PRODUCT



Read and understand all instructions before operating the product. Follow all warnings and safety instructions.



Wear ear protection.



Wear eye protection.



Do not operate on inclines greater than 15°. Mow across the face of slopes, never up and down.



Do not expose the product to rain or damp condition.



Beware of sharp blades. Blades continue to rotate after the motor is switched off. Remove the isolator key before maintenance.



Beware of thrown or flying objects. Keep all bystanders, especially children and pets, at least 15 m away from the operating area.



Beware of sharp blades. Blades continue to rotate after the motor is switched off.



Remove the isolator key before maintenance.



Waste electrical products should not be disposed of with household waste. Please recycle where facilities exist. Check with your local authority or retailer for recycling advice.



Conforms to all regulatory standards in the country in the EU where the product is purchased



EurAsian Conformity Mark



Ukrainian mark of conformity



Guaranteed sound power level



Go



Stop

SYMBOLS IN THIS MANUAL



Parts or accessories sold separately



Note



Warning

The following signal words and meanings are intended to explain the levels of risk associated with this product:

⚠ DANGER
Indicates an imminently hazardous situation, which, if not avoided, will result in death or serious injury.

⚠ WARNING
Indicates a potentially hazardous situation, which, if not avoided, could result in death or serious injury.

⚠ CAUTION
Indicates a potentially hazardous situation, which, if not avoided, may result in minor or moderate injury.

CAUTION
(Without Safety Alert Symbol) Indicates a situation that may result in property damage.

RY18LMX37A-140
RY18LMX37A-150

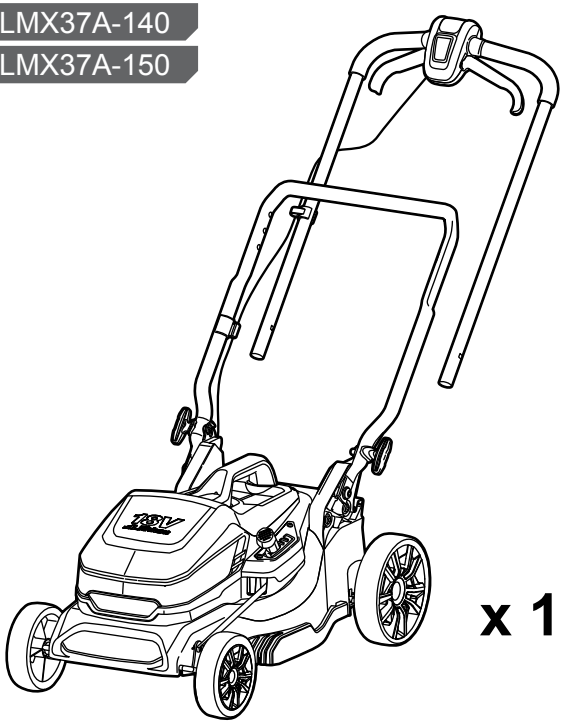

x 1

RY18LMX37A-140

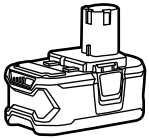

x 1

RY18LMX37A-150

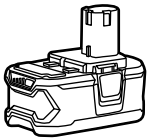

x 1



x 2



x 1



x 2

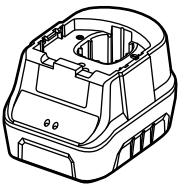

x 1

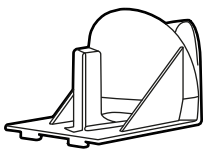

x 1

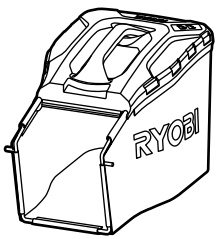

x 1



x 1





15 mm

RY18LMX37A-0

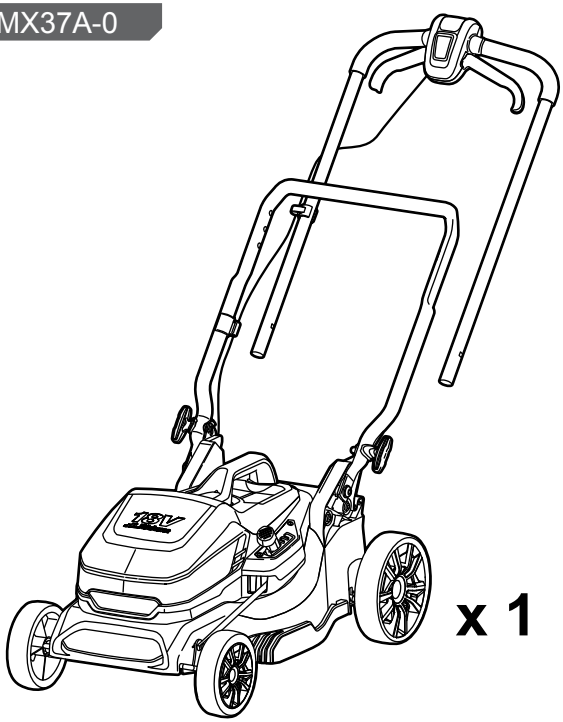

x 1



x 1



x 2



x 2

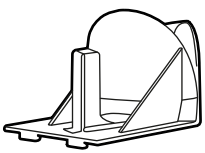

x 1

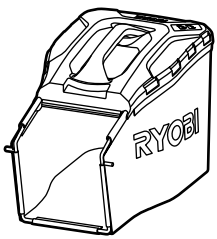

x 1



x 1





15 mm

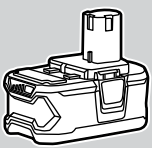

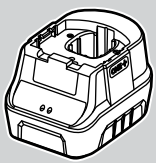

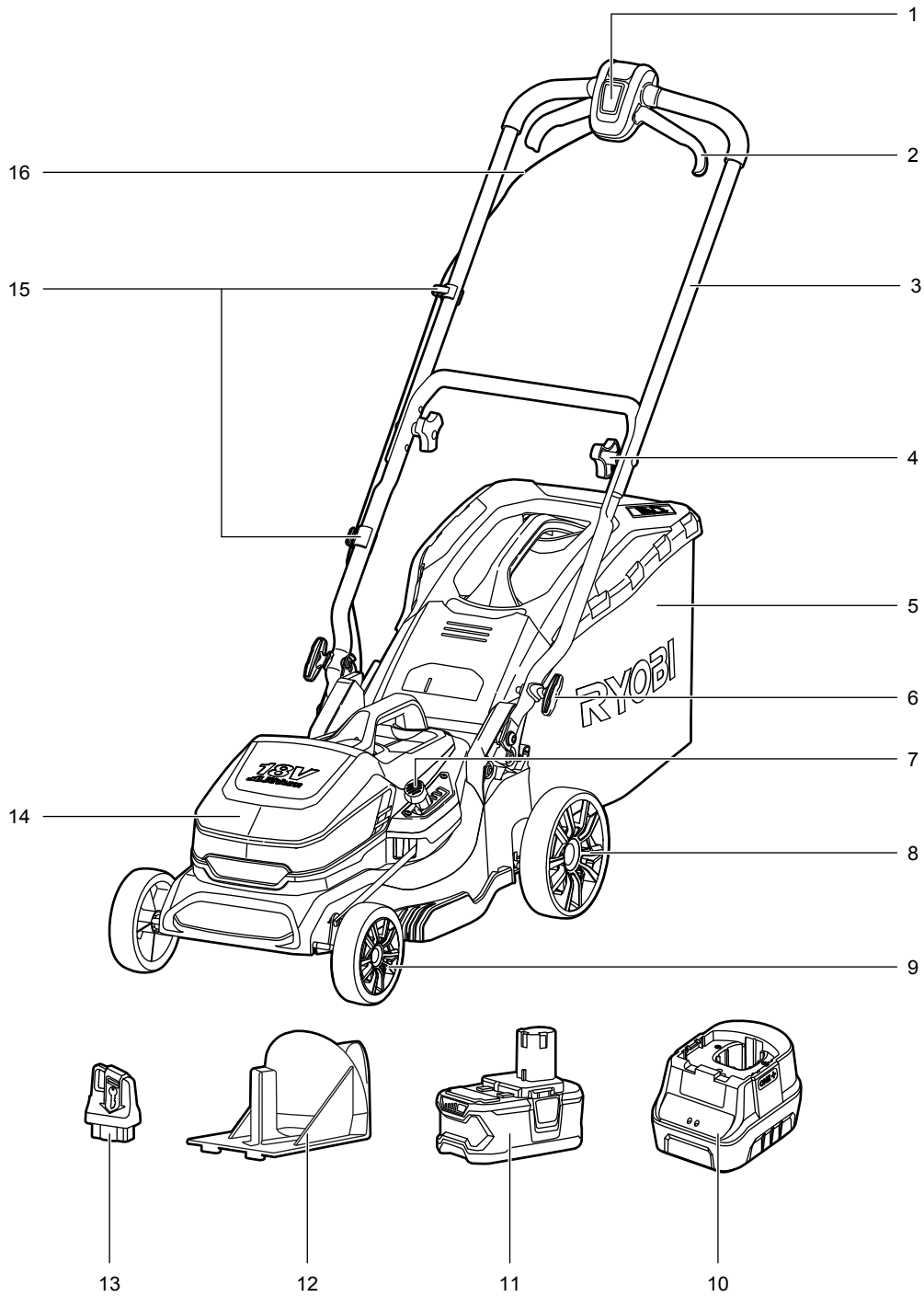
1
2
3
4
5
6
7
8
9
10
11
12
13
14
15
16
RYOBI
18V

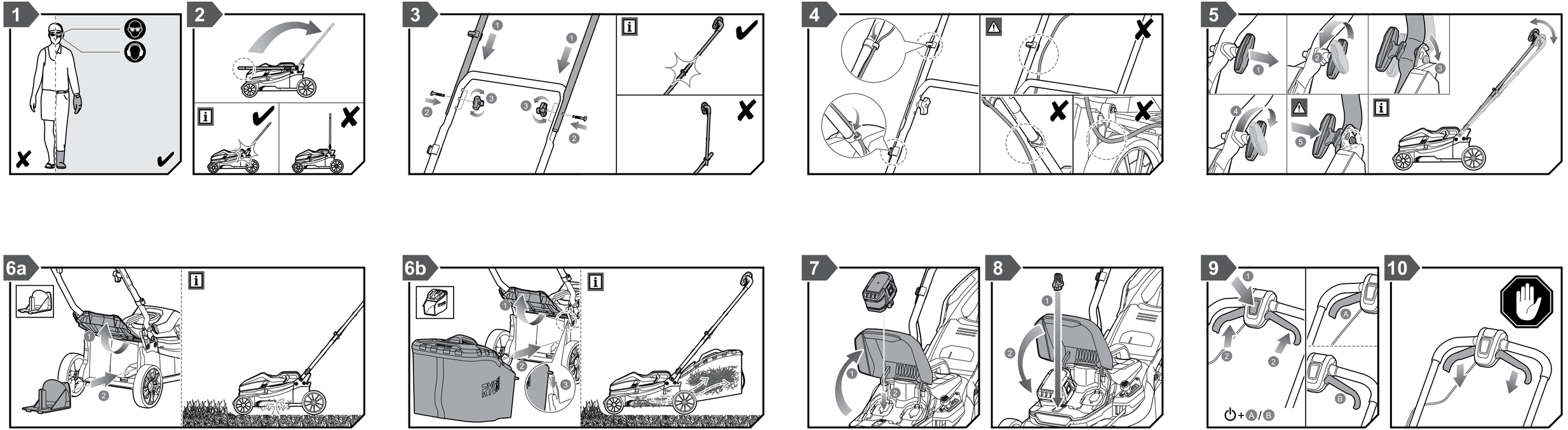
1
2
3
4
5
6a
6b
7
8
9
10
A
B

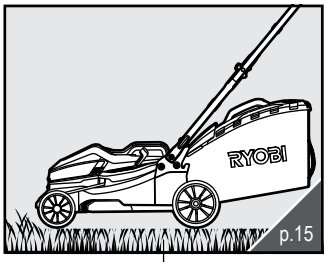
RYOBI
p.15

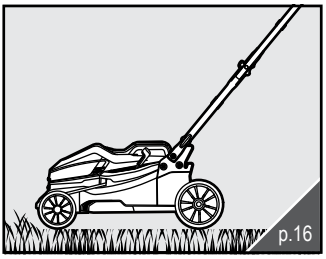
p.16

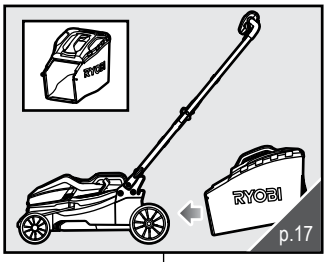
RYOBI
p.17

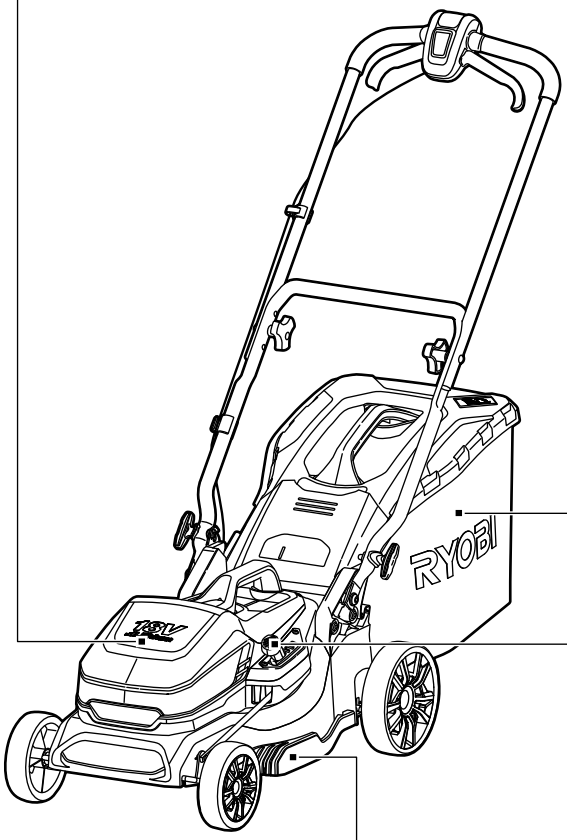
RYOBI

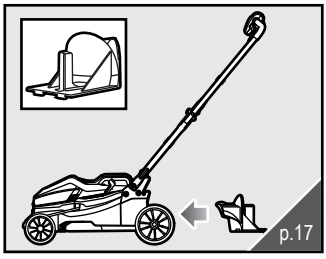
p.17

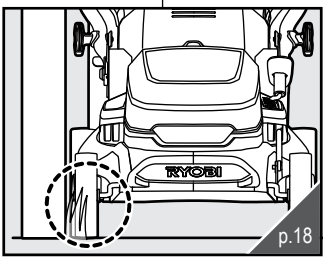
RYOBI
p.18

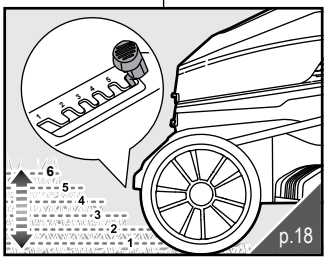
6
5
4
3
2
1
p.18

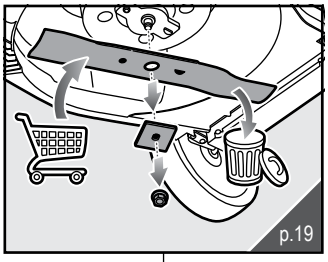
p.19

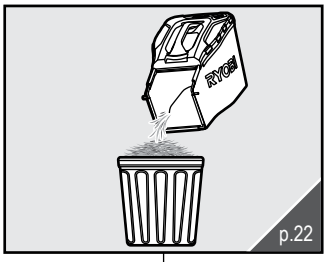
RYOBI
p.22

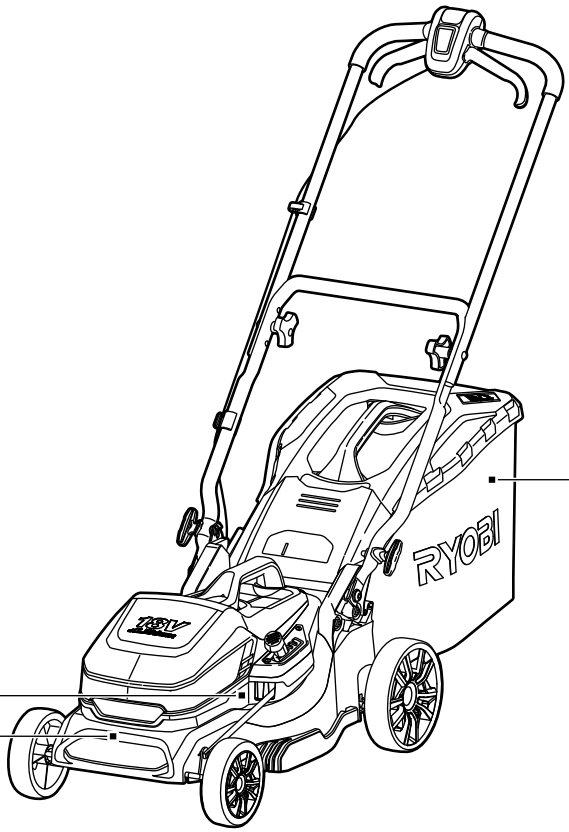
RYOBI

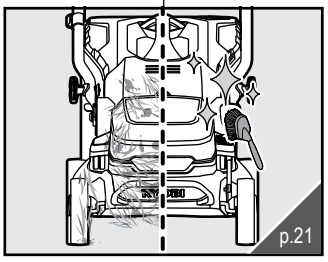
p.21

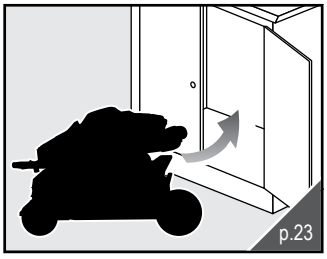
p.23

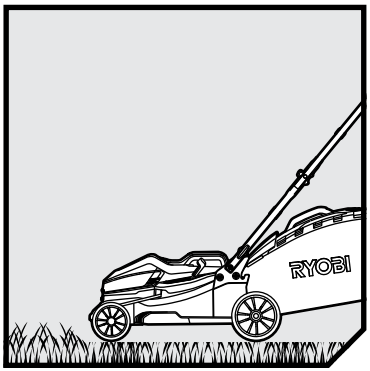
RYOBI

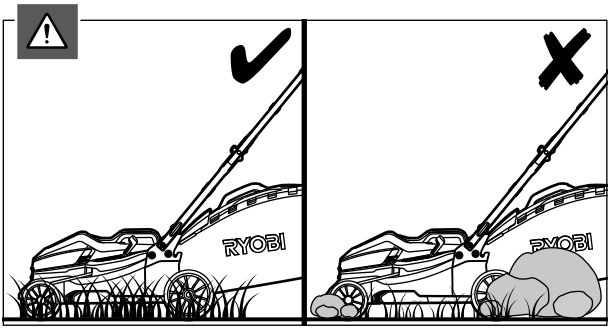
RYOBI
RYOBI

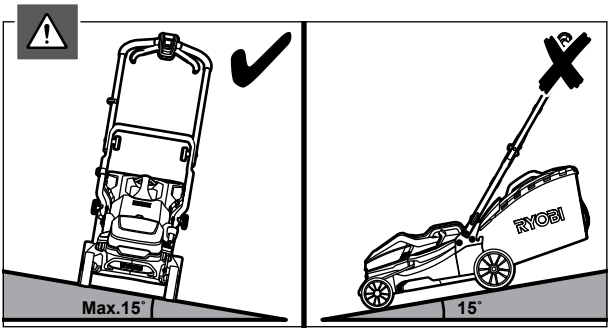
Max.15°
RYOBI
15°

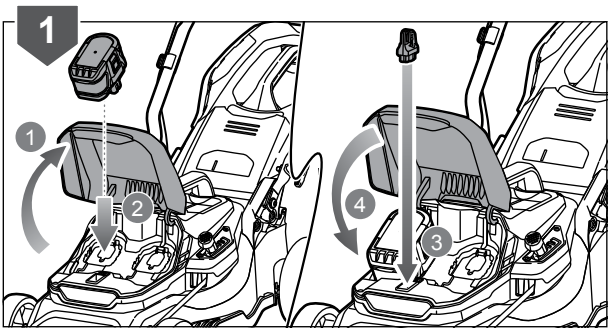
1
1
2
4
3

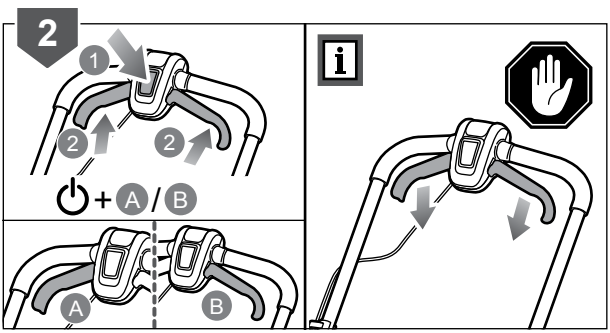
2
1
2
2
+ A / B
A
B

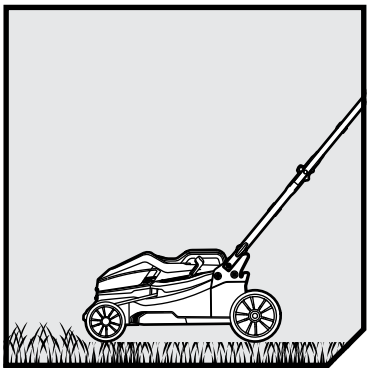

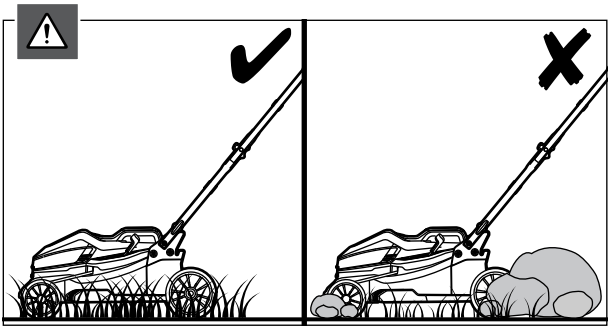

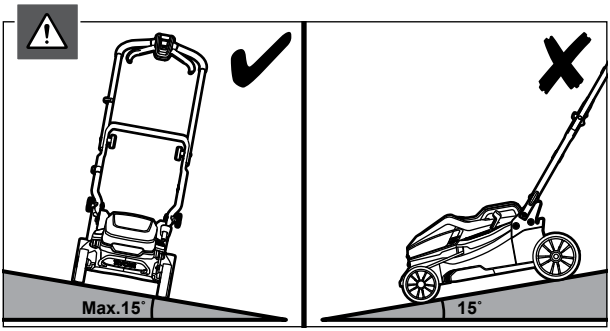
Max.15˚
15˚

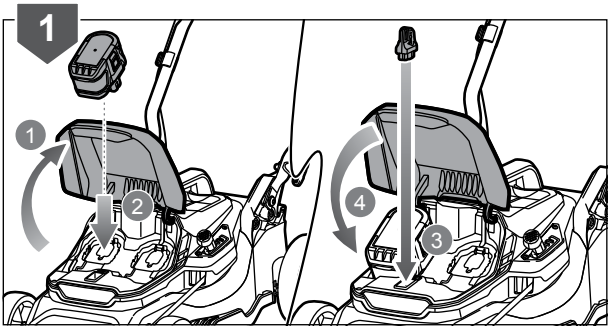
1
1
2
4
3

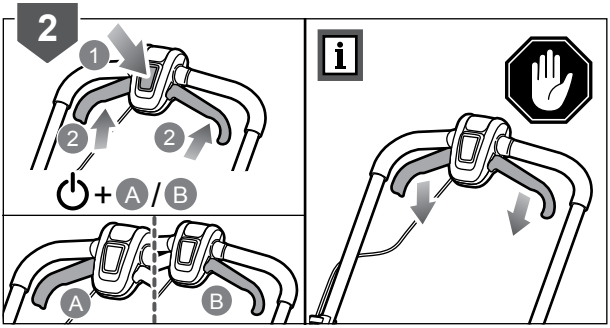
2
1
2
2
+ A / B
A
B

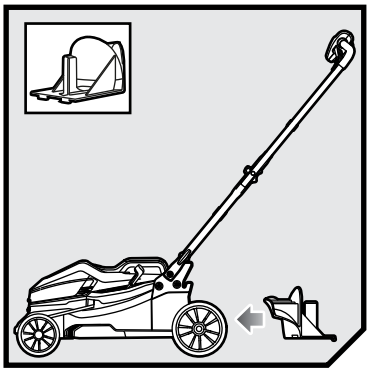

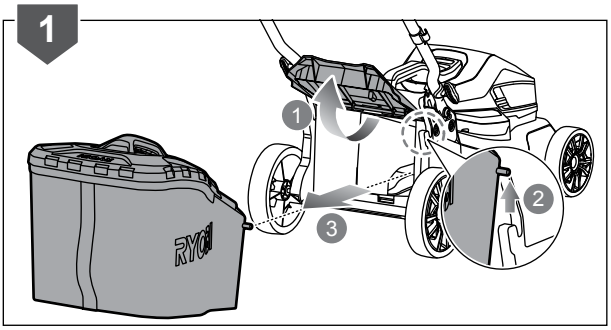
1
1
2
3

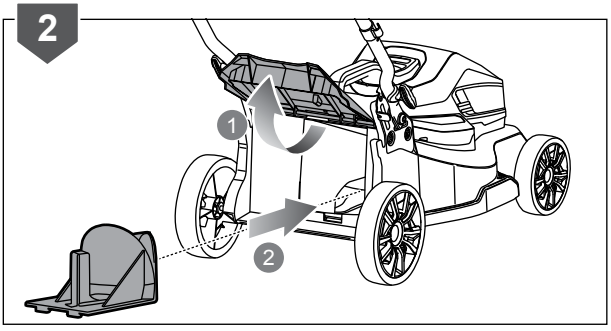
2
1
2

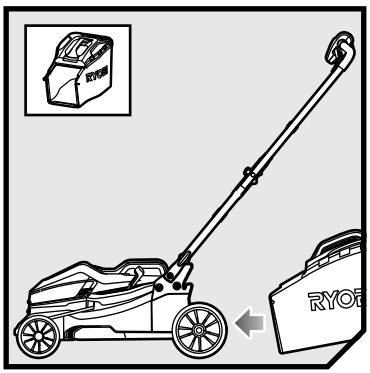

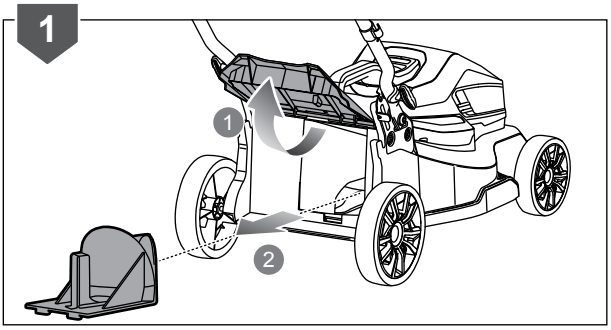
1
1
2

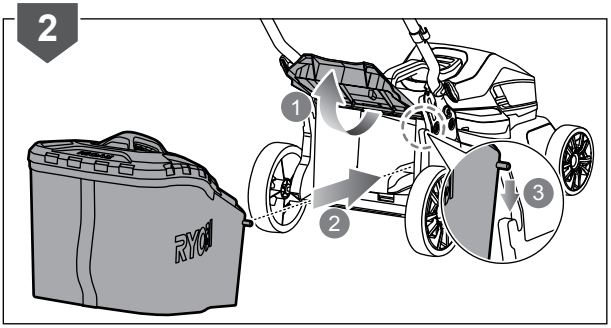
2
1
2
3

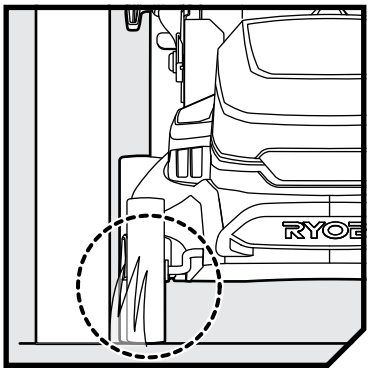

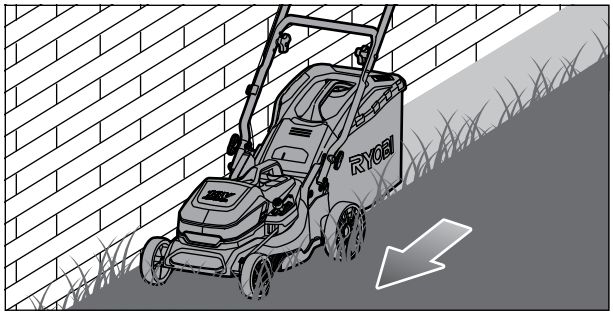

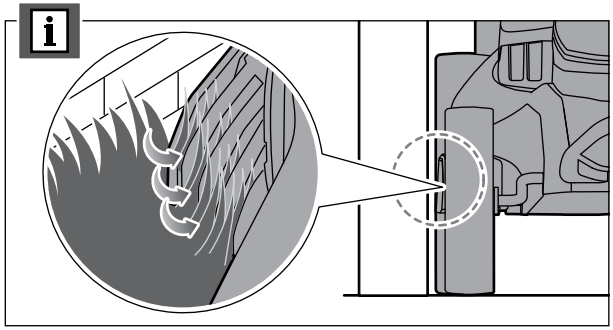

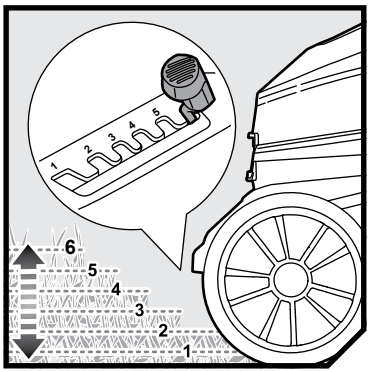
6
5
4
3
2
1

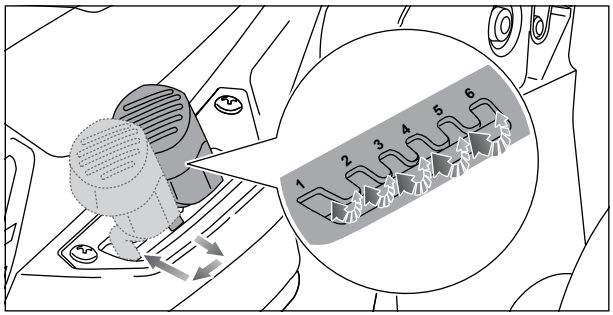
1
2
3
4
5
6

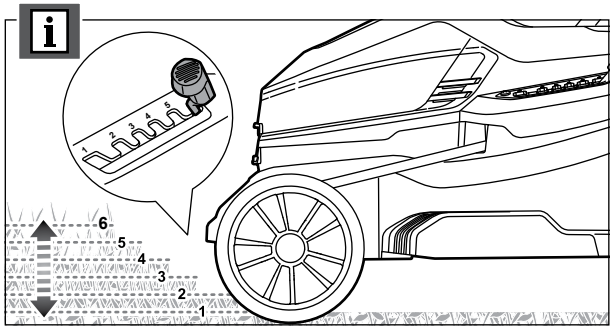
6
5
4
3
2
1

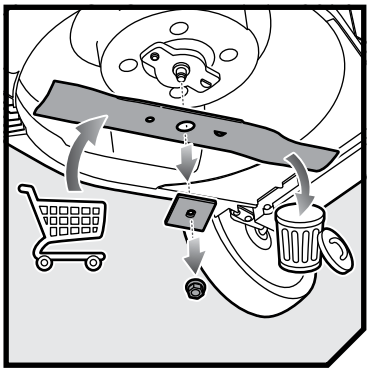

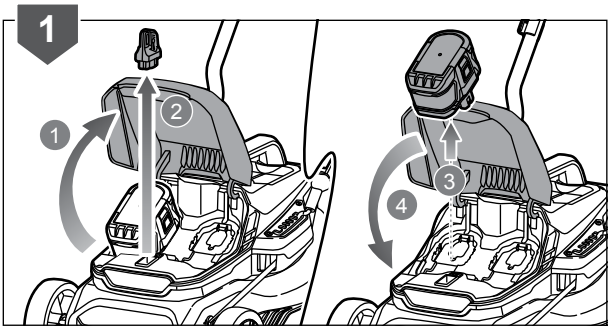
1
1
2
3
4

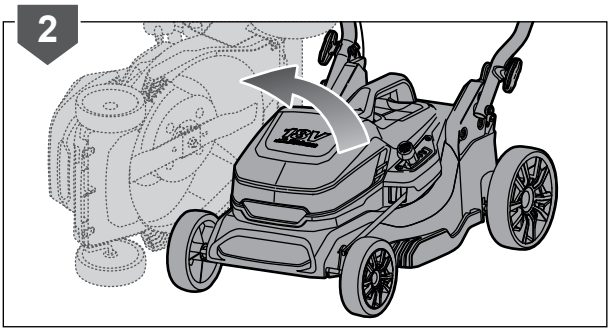
2

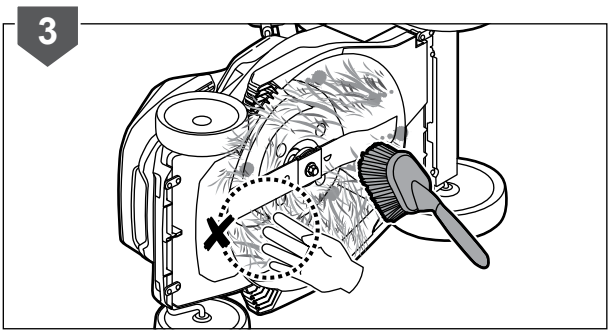
3

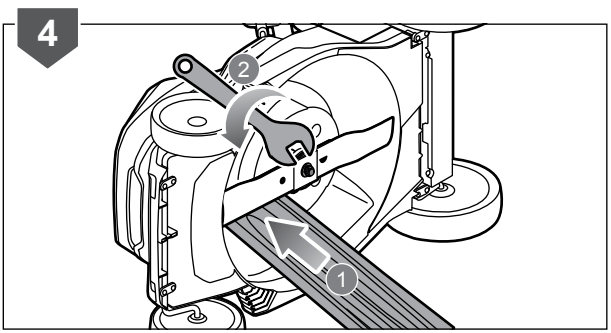
4
2
1

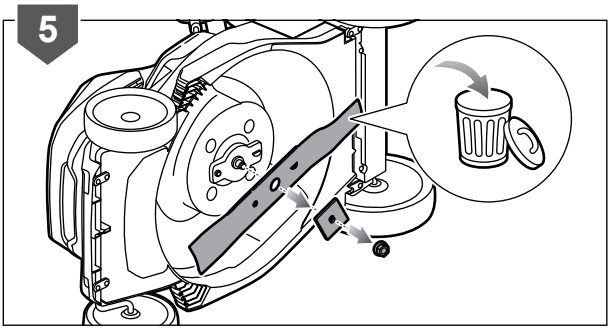
5

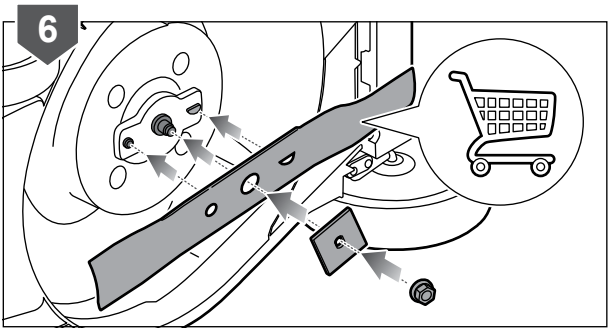
6

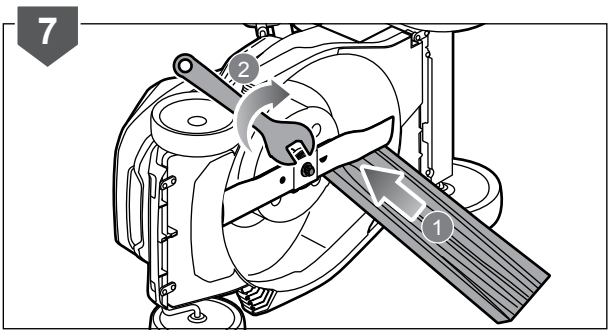
7
2
1

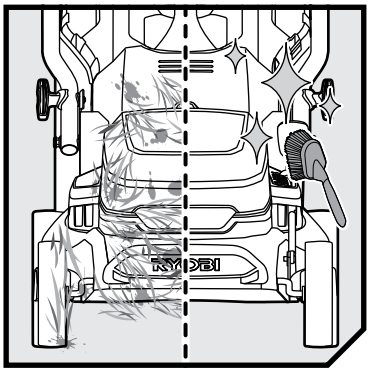

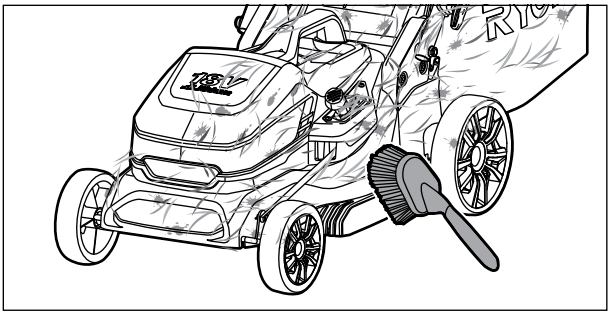

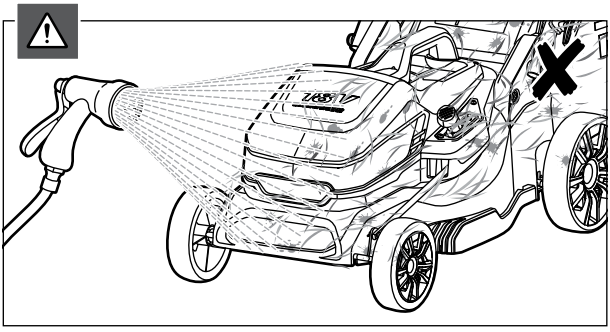

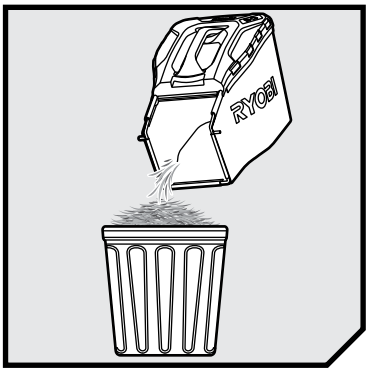

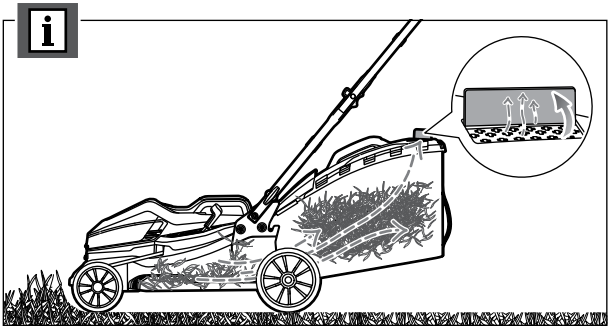

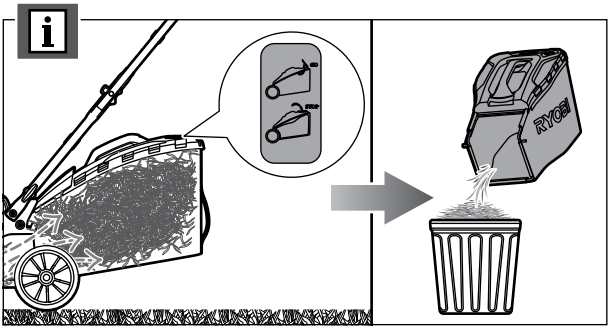

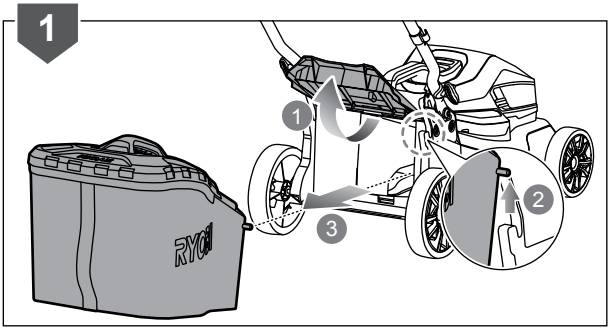
1
2
3

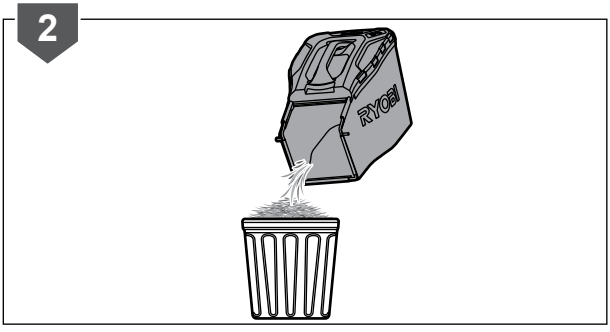
2

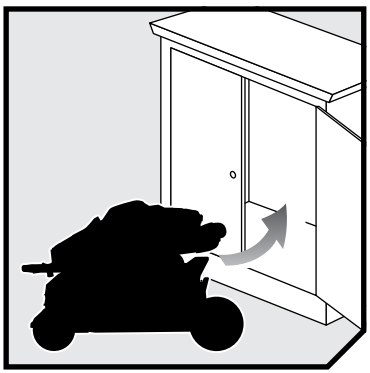

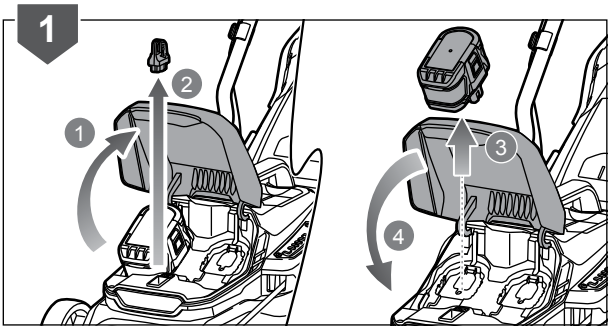
1
1
2
3
4

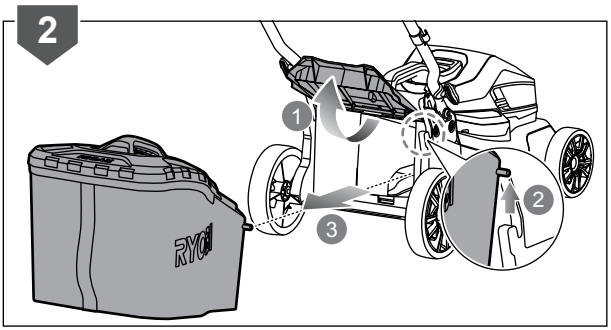
2
1
2
3

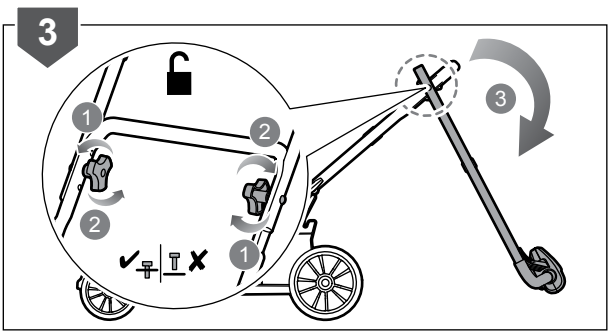
3
1
2
2
1
3

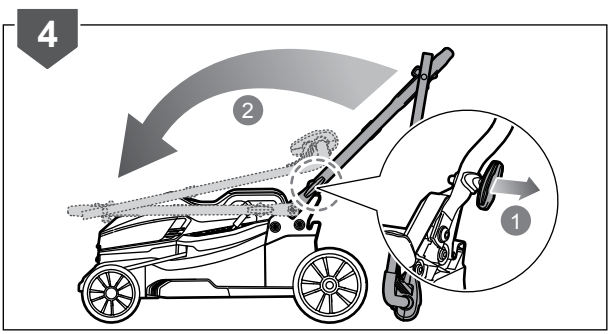
4
2
1

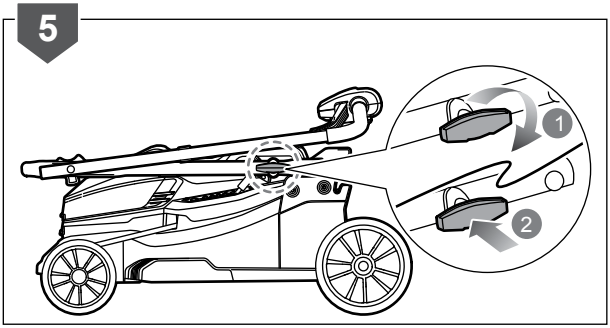
5
1
2

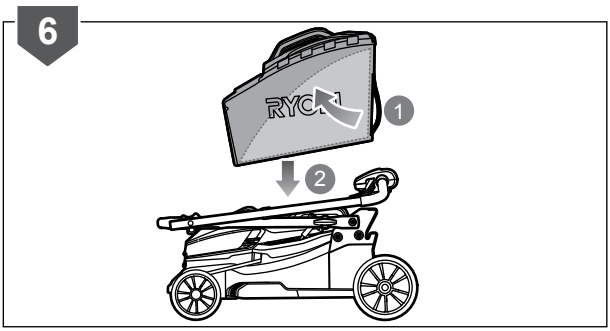
6
1
2

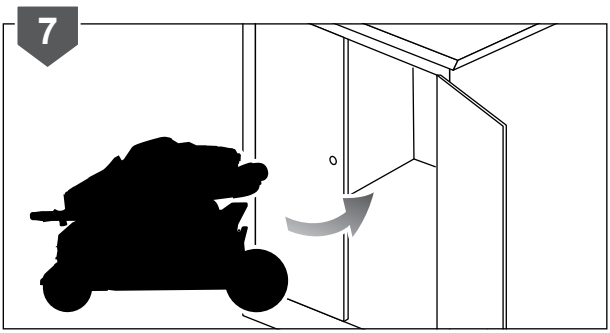
7

PRODUCT SPECIFICATIONS

Product name	Cordless Lawnmower
Model	RY18LMX37A
Rated voltage	18V d.c.
Width of cut	37 cm
Height of cut	25 - 70 mm
No-load speed	3, 800±10% min^{-1}
Weight (without battery)	11.0 kg
Grass catcher capacity	45 L
Blade bolt torque	35~40 Nm
Vibration level (in accordance with Annex FF of EN 60335-2-77)	a_h = 1.3 m/s^2
Uncertainty of measurement	K = 1.5 m/s^2
Noise emission level (in accordance with Annex GG of EN 60335-2-77)	
A-Weighted sound pressure level at operator's position	L_{pA} = 78.5 dB(A)
Uncertainty of measurement	K = 2.5 dB
A-Weighted sound power level	L_{wA} = 88.7 dB(A)
Uncertainty of measurement	K = 1.6 dB
$L_{wA} + K_{wA}$	91 dB(A)

BATTERY AND CHARGER

Model	RY18LMX37A -0	RY18LMX37A -140
Battery pack	not included	RB18L40
Weight	-	0.73 kg
Charger	not included	RC18120
Compatible battery packs	RB18L13, RB18L15, RB18L20, RB18L25, RB18L30, RB18L40, RB18L50, RB18L90	
Compatible chargers	BCL14181H, BCL14183H, RC18115, RC18120, RC18150, RC18627	

Model	RY18LMX37A -150
Battery pack	RB18L50
Weight	0.73 kg
Charger	RC18120
Compatible battery packs	RB18L13, RB18L15, RB18L20, RB18L25, RB18L30, RB18L40, RB18L50, RB18L90
Compatible chargers	BCL14181H, BCL14183H, RC18115, RC18120, RC18150, RC18627

REPLACEMENT PART

Blade	RAC435 (682391001)

VIBRATION LEVEL

⚠ WARNING

The declared vibration value has been measured with a standard test method and may be used to compare one tool with another.

The declared vibration value may be used in a preliminary assessment of exposure.

The vibration emission during actual use of power tool can differ from the declared total value depending on the ways in which the tool is used.

Identify safety measures to protect the operator based on an estimation of exposure in the actual conditions of use, taking account of all parts of the operating cycle such as the times when the tool is switched off and when it is running idle in addition to the trigger time.

RYOBI® WARRANTY APPLICATION CONDITIONS

In addition to any statutory rights resulting from the purchase, this product is covered by a warranty as stated below.

1. The warranty period is 24 months for consumers and commences on the date the product was purchased. This date has to be documented by an invoice or other proof of purchase. The product is designed and dedicated to consumer and private use only. So there is no warranty provided in case of professional or commercial use. This warranty applies only on new products.
2. There is a possibility to extend for a part of the range of power tools (AC/DC) the warranty period over the period described above using the registration on the www.ryobitools.eu website. The eligibility of products for extended warranty is clearly displayed in stores and / or on packaging and is contained within the product documentation. The end user is required to register his/her newly-acquired products online within 30 days from the date of purchase. The end user may register for the extended warranty in his/her country of residence if listed on the online registration form where this option is valid. Furthermore, end users must give their consent to the storage of their personal data that is required to be entered online. They must also accept the terms and conditions. The registration confirmation receipt, which is sent out by e-mail, and the original invoice showing the date of purchase will serve as proof of the extended warranty.
3. The warranty covers all defects of the product during the warranty period due to faults in workmanship or material at the purchase date. The warranty is limited to repair and/or replacement and does not include any other obligations including but not limited to incidental or consequential damages. The warranty is not valid if the product has been misused, used contrary to the instruction manual, or has been incorrectly connected to a power supply. This warranty does not apply to:
   - any damage to the product that is the result of improper or lack of maintenance
   - any product that has been altered or modified
   - any product where original identification (trade mark, serial number) markings have been defaced, altered or removed
   - any damage caused by non-observance of the instruction manual
   - any product not displaying the CE approval mark on the rating plate
   - any product that has been attempted to be repaired by a non-authorised warranty service centre or without prior authorisation by Techtronic Industries
   - any product connected to an improper power supply (amps, voltage, frequency)
   - any product used with inappropriate fuel mixture (fuel, oil, Ratio of oil / fuel mixture)
   - any damage caused by external influences (water, chemical, physical, shocks) or foreign substances
   - normal wear and tear spare parts
   - inappropriate use, overloading of the tool
   - use of non-approved accessories or parts
   - Accessories provided with the tool or purchased separately including but not limited to blades, saw chains, cutting lines etc.
   - Any periodic adjustments to or maintenance cleaning of carburetors
   - Components (parts and accessories) subject to natural wear and tear, including but not limited to bump knobs, drive belts, clutch, blades of hedge trimmers or lawnmowers, harness, cable throttle, carbon brushes, power cord, tines, felt washers, hitch pins, blower fans, blower and vacuum tubes, vacuum bag and straps, guide bars, saw chains, hoses, connector fittings, spray nozzles, wheels, spray wands, inner reels, outer spools, cutting lines, spark plugs, air filters, gas filters, mulching blades, etc.
4. For servicing, the product must be sent or presented to a RYOBI authorised service station listed for each country in the following list of service station addresses. In some countries your local RYOBI dealer undertakes to send the product to the RYOBI service organisation. When sending a product to a RYOBI service station, the product should be safely packed without any dangerous contents such as petrol, marked with sender's address and accompanied by a short description of the fault.
5. A repair / replacement under this warranty is free of charge. It does not constitute an extension or a new start of the warranty period. Exchanged parts or products become our property. In some countries delivery charges or postage will have to be paid by the sender. Your statutory rights arising from the purchase of the product remain unaffected.
6. This warranty is valid in the European Community, Switzerland, Iceland, Norway, Liechtenstein, Turkey and Russia. Outside these areas, please contact your authorised RYOBI dealer to determine if another warranty applies.

AUTHORISED SERVICE CENTRES

ACD PLANT LTD
145 Southbank Road
Coundon
Coventry, West Midlands
CV6 1FG
Phone: 02476 594348
Email: danmcgunigle@acdplant.co.uk
Web: www.acdplant.co.uk

CBS Power Tools Limited
Unit 4, V P Square
Storeys Bar Rd, Fengate
Peterborough, Cambridgeshire
PE1 5YS
Phone: 01733 343031
Email: steve@cbspowertools.co.uk
Web: www.cbspowertools.com

C D Powertools
76 Old Road
Churwell Morley, Leeds
LS27 7TH
Phone: 0113 2718494
Email: info@cdpowertools.co.uk
Web : www.cdpowertools.co.uk

C J Sinclair Limited
44 Victoria Road
St Peters
Broadstairs, Kent
CT10 2UG
Phone: 01843 869400
Email: repairs@cjsinclairltd.co.uk
Web: www.cjsinclairltd.co.uk

ToolTech Industrial Equipment
227 E Dunhill Road, Macosquin
Coleraine, Co Londonderry
BT514LQ
Phone: 028 70359493
Email: john@tooltech.org.uk

For an updated list of authorised service centres, visit http://uk.ryobitools.eu/header/service-and-support/service-agents.

DECLARATION OF CONFORMITY

Techtronic Industries GmbH
Max-Eyth-Strasse 10, D-71364 Winnenden, Germany

Herewith we declare that the product

Cordless Lawnmower
Brand: RYOBI
Model number: RY18LMX37A
Serial number range: 47514801000001-47514801999999

is in conformity with the following European Directives and harmonised standards

2006/42/EC, 2014/30/EU, 2000/14/EC, 2005/88/EC, 2011/65/EU, EN 60335-1:2012 +A11:2014+A13:2017, EN 60335-2-77:2010, EN 55014-1:2017, EN 55014-2:2015, EN 62233:2008, EN IEC 63000:2018

Measured sound power level 88.7 dB(A)
Guaranteed sound power level 92 dB(A)
Conformity assessment method to Annex VI Directive 2000/14/EC amended by 2005/88/EC
The notified body involved:
No.0197 – TÜV Rheinland LGA Products GmbH
Tillystraße 2 - 90431 Nürnberg – Germany



CE

Todd Chipner
Sr. Director, CPT Quality and Asia Regulatory & Safety
Winnenden, Dec. 26, 2019

Authorised to compile the technical file:
Alexander Krug, Managing Director
Techtronic Industries GmbH
Max-Eyth-Straße 10, 71364 Winnenden, Germany

RYOBI is a trade mark of Ryobi Limited,
and is used under license.
© 2019-20 Techtronic Cordless GP.

Techtronic Industries GmbH
Max-Eyth-Straße 10,
71364 Winnenden, Germany

961479027-03