RYOBI

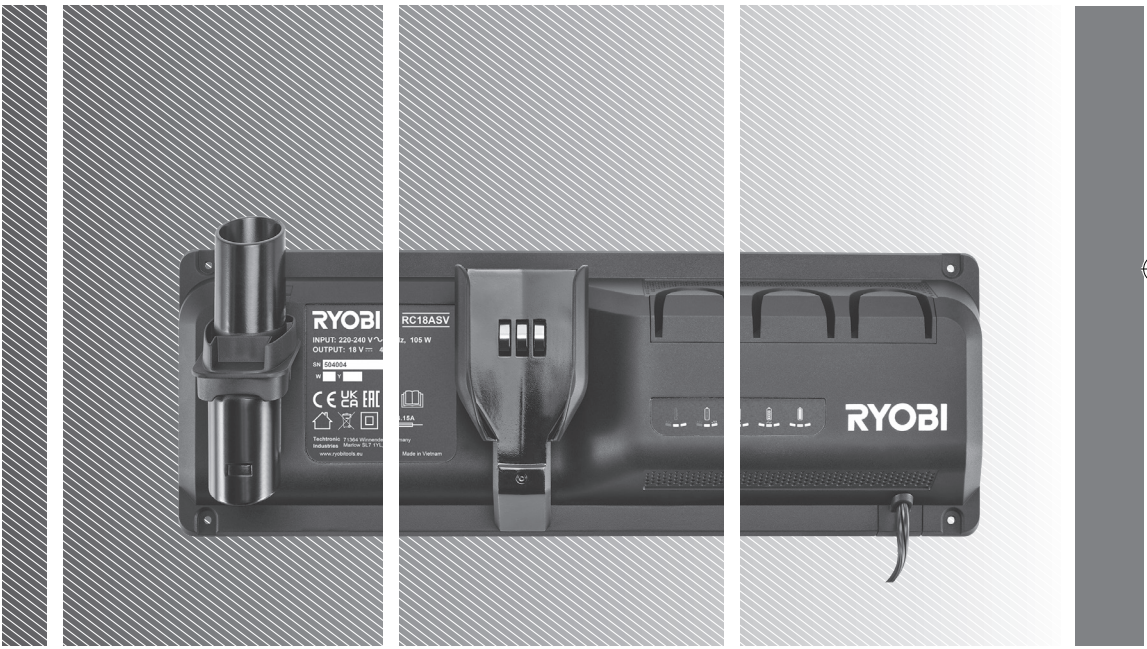

RC18ASV

IMPORTANT!

This appliance can be used by children aged from 8 years and above and persons with reduced physical, sensory or mental capabilities or lack of experience and knowledge if they have been given supervision or instruction concerning use of the appliance in a safe way and understand the hazards involved. Children shall not play with the appliance. Cleaning and user maintenance shall not be made by children without supervision.

It is essential that you read the instructions in this manual before assembling, operating, and maintaining the product.

Subject to technical modifications.

Safety, performance, and dependability have been given top priority in the design of your battery charger.

INTENDED USE

The charger is intended only to charge the compatible battery packs attached to compatible stick vac model(s) listed in this operator's manual.

The product must be mounted on a wall before the stick vac or any other accessory is attached to it.

The product is only for indoor use, in dry conditions.

The product is not intended to charge any other type of battery or be used as a power supply. It should never be used in explosive or flammable environments.

Do not use the product for any other purpose.

CHARGER SAFETY WARNINGS

- Read all safety warnings and all instructions. Failure to follow the warnings and instructions may result in electric shock, fire and/or serious injury.
- Do not recharge primary cells (non-rechargeable).
- The product must not be damp and should never be used in a damp environment.
- The product is for indoor use only.
- Do not cover any ventilation slots, and provide adequate ventilation during operation.
- Mains voltage must correspond with the voltage specifications on the product.
- Before using the product, check that the charger enclosure, cable, and plug are not damaged. If damage is found, do not use the product and bring it to an authorised service centre for repair.
- Do not use the product if it has suffered any heavy shock or jolting, or if it is damaged in any other way.
- When charging, do not expose the product to sunlight or other heat source. The recommended temperature range at charging vicinity is 10° to 25°C.
- Due to the heat generated during charging, do not use the product on a combustible surface.
- Do not use the product near flammable materials, such as cloth, packaging materials, paint, spray paint or aerosols, lubricants, thinners, petrol containers, gas containers, or gas appliances.
- Never modify, disassemble, or attempt to repair the product yourself.
- Do not allow the charger or battery packs to become contaminated with any material that could be conductive, such as metallic particles from grinding, cutting, or machining processes.
- Protect the battery contact terminals from metallic objects to avoid a short circuit, which can cause fire or explosion.
- Unplug the product from the power socket when it is not in use or when cleaning it.
- Use only an extension cable that is approved and in good condition.
- Do not charge battery packs that show signs of leaks. Dispose of them properly.
- Never charge a damaged battery pack. Replace damaged battery packs immediately.

ADDITIONAL BATTERY SAFETY WARNINGS

To reduce the risk of fire, personal injury, and product damage due to a short circuit, never immerse your tool, battery pack or charger in fluid or allow a fluid to flow inside them. Corrosive or conductive fluids, such as seawater, certain industrial chemicals, and bleach or bleach-containing products, etc., can cause a short circuit.

WALL MOUNTING

- Carefully select a stable wall for mounting the charger. Make sure that there is no hindrance to mounting work or operation. The maximum gross weight of the charger with compatible stick vac, accessories, and heaviest battery and is approximately 7 kg. Provide sufficient reinforcement for the wall if necessary.
- Mount the charger in a horizontal orientation only. Install four screws on the wall to mount the charger. Otherwise, the charger may fall and cause serious injury.
- Check the tightness of the screws on a regular basis. Make sure that the head of the screws fit properly in the wall mounting holes to hold the charger firmly in place. Otherwise, the charger may fall because of loose screws.

OPERATION

CHARGING THE BATTERY PACK

- Battery packs are shipped in a low charge condition. Therefore, you should charge them before first use. If the charger does not charge the battery pack under normal circumstances, bring both the battery pack and charger to an authorised service centre.
- Make sure that the power supply is normal household voltage, 220–240V, 50/60Hz, AC only.
- Make sure that the battery pack latch clicks into place on the stick vac, and that the stick vac is stably mounted on the charger before charging.

NOTE: The charging times listed on the compatible battery packs table can vary depending on the type of the battery pack used(e.g., RB18L40, RB1840X, RB1840T).

NOTE: When the battery becomes fully charged, the green LED remains on. It is normal for the battery pack to become slightly warm to touch while charging.

NOTE: When charging, the charger, stick vac, and battery pack should be placed in a location where the temperature is more than 10°C but less than 25°C.

CHARGING A COOL BATTERY PACK

1. Insert the battery pack into the stick vac. Make sure that the battery pack latch clicks into place.
2. Mount the stick vac on the product.
3. Connect the product to a power supply.
4. Disconnect the product from the power supply when the battery pack becomes fully charged.

5. Remove the battery pack from the stick vac.

CHARGING A HOT BATTERY PACK

When using a tool continuously, the cells in the battery pack become hot. A hot battery pack should be allowed to cool down for approximately 30 minutes before recharging.

MAINTENANCE

- When not using or when cleaning the product, disconnect it from the power supply and remove the battery pack.
- If the supply cord is damaged, it must be replaced by the manufacturer, its service agent or similarly qualified persons in order to avoid a hazard.
- Avoid using solvents when cleaning plastic parts. Most plastics are susceptible to various types of commercial solvents. Use clean cloth or soft brush to remove dirt and dust.
- Do not, at any time, let brake fluids, gasoline, petroleum-based products, and penetrating oils come in contact with plastic parts. These products contain chemicals that can damage, weaken, or destroy plastic.
- Hazardous voltages are present within the product; do not disassemble.

CLEANING THE CHARGER

- Unplug the charger power cord from the power supply before cleaning to prevent serious personal injury.
- Clean the charger surface (except labels) using a damp cloth with a mild detergent.
- Do not use any strong detergents on the plastic housing. They can be damaged by certain aromatic oils, such as pine and lemon, and by solvents such as kerosene.
- Moisture can cause a shock hazard. Wipe off any moisture with a soft dry cloth.

STORAGE

- Store the product in a cool dry place between 10°C and 38°C.

KNOW YOUR PRODUCT

See page 5.

1. Accessory holder
2. Docking cradle
3. Accessory holder
4. Wall mounting holes
5. Screw
6. Wall plug
7. Operator's manual

SYMBOLS

Direct current

Alternating current


Class II equipment


Please read the instructions carefully before starting the product.


For indoor use only.

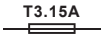

Time-lag fuse 3.15A


Do not dispose of waste electrical and electronic equipment as unsorted municipal waste. Waste electrical and electronic equipment must be collected separately. Waste light sources have to be removed from the equipment. Check with your local authority or retailer for recycling advice and collection point. According to local regulations, retailers may have an obligation to take back waste electrical and electronic equipment free of charge. Your contribution to the reuse and recycling of waste electrical and electronic equipment helps to reduce the demand of raw materials. Waste electrical and electronic equipment contain valuable and recyclable materials, which can adversely impact the environment and the human health if not disposed of in an environmentally compatible manner. Delete personal data from waste equipment, if any.

COMPATIBLE BATTERY PACKS

Battery pack	Voltage	Charger input	Battery type	Battery capacity	Number of cell for battery	Approximate charging time (minutes)
RB18L15.. RB1815..	18 V ⎓	220 - 240V ∿ 50/60 Hz	Lithium-Ion	1.5 Ah	5	25
RB18L20.. RB1820..				2.0 Ah	5	30
RB18L25.. RB1825..				2.5 Ah	5	40
RB18L40.. RB1840..				4.0 Ah	10	60
RB18L50.. RB1850..				5.0 Ah	10	75
RB1860..				6.0 Ah	10	90
RB1880..				8.0 Ah	10	120
RB18L90..				9.0 Ah	15	135
RB18120..				12.0 Ah	15	180

CHARGER LED FUNCTIONS

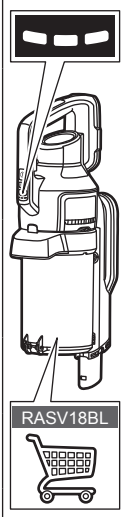

LED indicator		Battery pack status	Red LED	Green LED	Action
	Evaluate	Hot battery pack	Flashing	OFF	When battery pack reaches cooled temperature, charger begins fast charge mode.
	Evaluate	Cold battery pack	Flashing	OFF	When battery pack reaches warmed temperature, charger begins fast charge mode.
	Defective	Defective	Flashing	Flashing	Battery pack or charger is defective.
	• If defective, try to repeat the conditions a second time by removing and reinstalling the battery pack. If the LED status repeats a second time, try charging a different battery. • If a different battery charges normally, dispose of the defective pack (see Maintenance section). • If a different battery also indicates “Defective,” the charger may be defective.				
	Charging	Fast charging	OFF	Flashing	Battery pack is being charged.
	Charging	Taper charging	OFF	Fading	Battery pack is being charged at lower rate.
	Full	Fully charged	OFF	ON	Charging is complete.

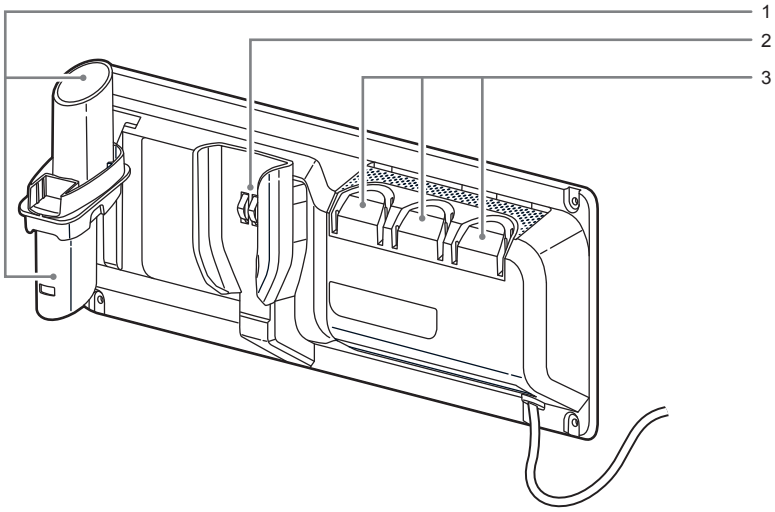
1
2
3

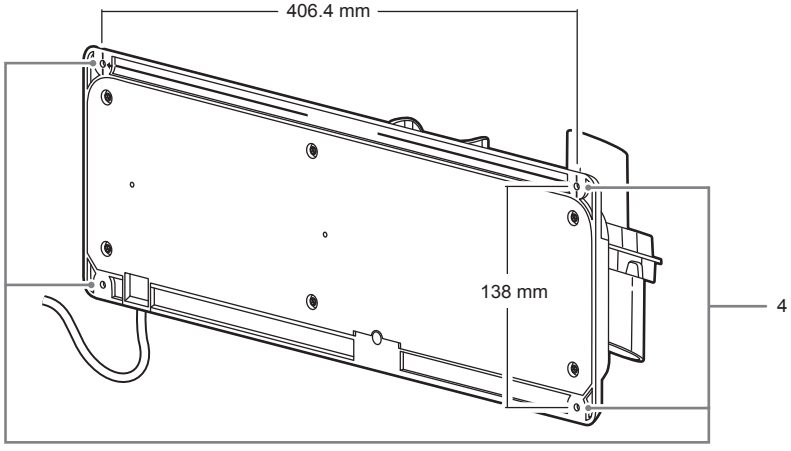
406.4 mm
138 mm
4


x4
5


x4
6


7



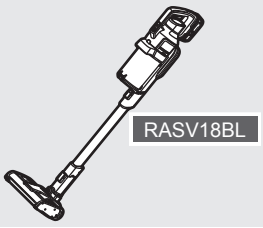
RASV18BL

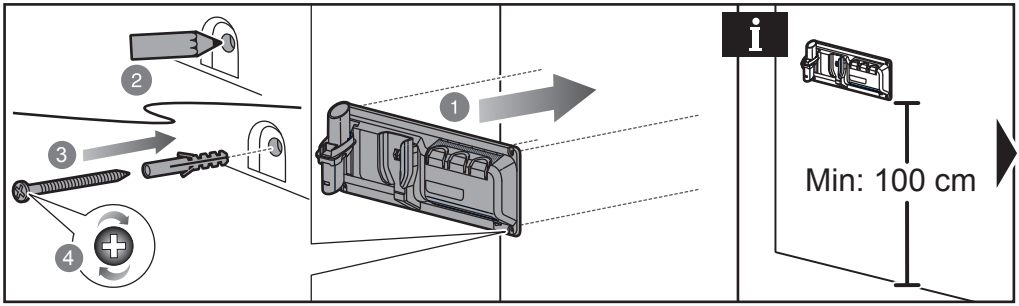
2
1
3
4
Min: 100 cm

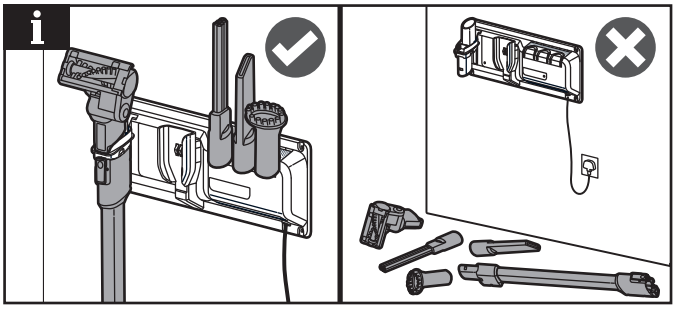

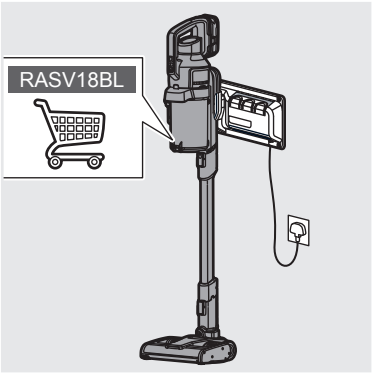
RASV18BL

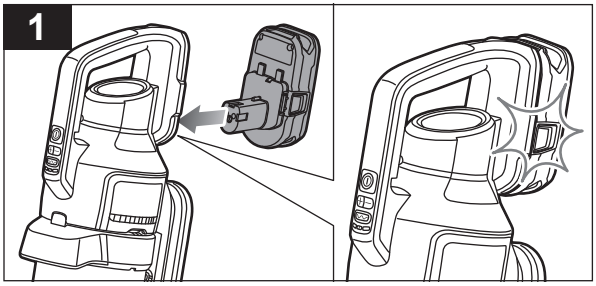
1

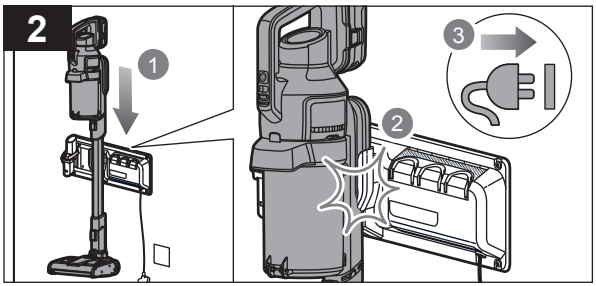
2
1
2
3

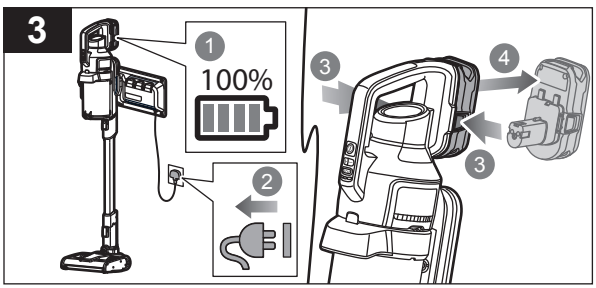
3
1
100%
2
3
4
3

PRODUCT SPECIFICATIONS

Stick Vac Charger	
Model	RC18ASV
Weight	1.2 kg
Weight with heaviest stick vac, accessories, and battery attached	7 kg
Charger output voltage	18 V ⎓
Charger input	220 - 240 V ∿ 50/60 Hz
Input power	105 W
Charger output current	4 A
Operating temperature	5°C - 40°C
Compatible stick vac model	RASV18BL

RYOBI GUARANTEE APPLICATION CONDITIONS

In addition to any statutory rights arising from the purchase of a product and without prejudice on the statutory rights which apply independently and free of charge, all new RYOBI branded power tools and/or garden tools listed on our website, excluding tool accessories, tool storage systems, and spare parts, as further outlined under ("Product"), are covered by a voluntary guarantee issued by Techtronic Industries GmbH ("TTI") subject to the terms and conditions as stated below ("Guarantee").

The Guarantee is only applicable to purchaser(s) who purchase the products as end users in their capacity as consumers ("Consumer"). Retailers, rental companies, as well as professional end users are expressly excluded from these general terms and conditions of the Guarantee. For professional end users, a different type of voluntary guarantee may be applicable to certain product(s), if explicitly provided on the www.ryobitools.eu website. The invocation of this voluntary Guarantee does not limit the statutory legal rights of the Consumer in case of a defect.

1. The standard guarantee ("Standard Guarantee"), provided that the Product is purchased for private use only, has a term of 24 months ("Standard Guarantee Period") and commences on the date the product was purchased. This date must be documented by an invoice or other proof of purchase in order for the Standard Guarantee to be valid and enforceable. This Standard Guarantee also only applies to new Product(s).
2. Consumers in certain countries may be able to extend the Standard Guarantee for eligible Products beyond the period of the Standard Guarantee by registering on the www.ryobitools.eu website. The eligibility of Products for the extended guarantee ("Extended Guarantee") is specified on the packaging of a Product, on the website at www.ryobitools.eu, and/or is contained within the relevant Product documentation under https://www.ryobitools.eu/. In order to benefit from the Extended Guarantee, Consumers are required to register their Product(s) online within 30 calendar days from the date of purchase to benefit from this Extended Guarantee. All personal information of a Consumer will be processed in accordance with the privacy statement, which can be found here https://uk.ryobitools.eu/footer-links/privacy-policy/. The registration confirmation receipt, which is sent out by e-mail, and the original invoice showing the date of purchase will serve as proof of the Extended Guarantee.
3. The Standard Guarantee and the Extended Guarantee ("Guarantees") are limited to repair and/or replacement of the defective Product at the discretion of TTI provided that the defect in workmanship or material existed at the date of purchase. No further costs or losses can be claimed. In addition, the Guarantees do not apply to:
   - any damage caused accidentally, wilfully, or negligently by the Consumer
   - any damage to the Product that is the result of improper treatment or lack of maintenance
   - any Product that has been altered or modified
   - any Product where original identification (trade mark, serial number) markings have been defaced, altered or removed
   - any damage caused by non-observance of the instruction manual
   - Products, which are not subject to a CE/UKCA marking
   - any Product that has been attempted to be repaired by a non-authorised service centre or without prior authorisation by TTI
   - any Product connected to improper power supply (amps, voltage, frequency)
   - any Product used with inappropriate fuel mixture (fuel, oil, ratio of oil)
   - any damage caused by external influences (water, chemical, physical, shocks) or foreign substances
   - normal wear and tear of spare parts
   - inappropriate use, overloading of the Product(s)
   - use of non-approved accessories or parts
   - power tool accessories provided with the tool or purchased separately. Such exclusions including but not limited to screw driver bits, drill bits, abrasive discs, sand paper and blades, lateral guide
   - components (parts and accessories) which are subject to normal wear and tear, including but not limited to service and maintenance kits, carbon brushes, bearings, chuck, SDS drill bit attachment or reception, power cord, auxiliary handle, transport carry case, sanding plate, dust bag, dust exhaust tube, felt washers, impact wrench pins and springs, bump knobs, drive belts, clutch, blades of hedge trimmers or lawnmowers, harness, cable throttle, tines, felt washers, hitch pins, blower fans, blower and vacuum tubes, vacuum bag and straps, guide bars, saw chains, hoses, connector fittings, spray nozzles, wheels, spray wands, inner reels, outer spools, cutting lines, spark plugs, air filters, gas filters, mulching blades, etc.
4. For guarantee servicing, the Product(s) must be sent or presented without undue delay after occurrence or recognition of the defect in workmanship or material to an authorised RYOBI service partner listed on the following website https://www.ryobitools.eu/. Consumers can obtain the services under the Guarantees from a RYOBI service partner by

   a. contacting the retailer where the purchase was made; or

   b. registering via the service platform available on the RYOBI Commercial webpage https://www.ryobitools.eu/, the availability of the process might vary from country to country.

   When sending a Product to an authorised RYOBI service partner, the Product shall be safely packaged without hazardous contents (for details, please see the safety instructions on the website at https://www.ryobitools.eu/), marked with sender's address and accompanied by a short description of the defect. Please note that in some countries delivery charges or postage will have to be paid by the sender according to local practice. Please consult your local authorised RYOBI service centre to confirm whether such charges apply.
5. Upon receipt of the Product claimed to be defective by the Consumer, it will be inspected. When the defect has been confirmed, the services under the Guarantees will be provided by repairing the defective parts of the products or replacing them by non-defective parts at TTI's discretion. If TTI refuses to repair the defect or if, at TTI's discretion, the repair has failed, an equivalent replacement will be supplied. The replaced Product(s) or part(s) will become the property of TTI. Any repair/replacement(s) under the Guarantees above are free of charge. The repair/replacement(s) conducted by TTI do not constitute an extension or a new start of the Guarantees. The replaced spare parts are subject to the Guarantees originally given and the period for the Guarantees will end with period for the Guarantee that was originally given for the entire product.
6. The RYOBI Guarantees are granted by Techtronic Industries GmbH, Max-Eyth-Str.10, 71364 Winnenden, Germany, only to the Consumer that originally purchased the Product and may not be transferred or assigned.
7. The Guarantees are valid in the European Economical Areas (EEA), Switzerland, and the United Kingdom. Outside these areas, please contact the retailer where the purchase was made to find out if another voluntary guarantee applies.

RYOBI is a trade mark of Ryobi Limited, and is used under license.

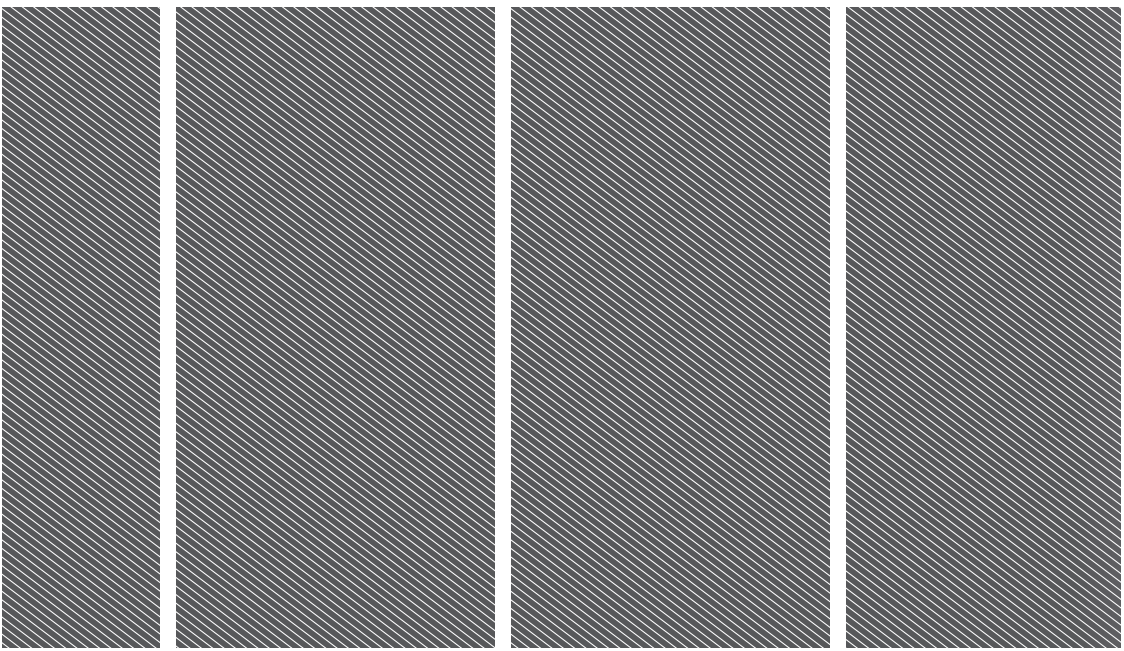

Techtronic Industries GmbH
Max-Eyth-Straße 10,
71364 Winnenden, Germany

Techtronic Industries (UK) Ltd
Parkway
Marlow Bucks SL7 1YL
UK

961123010-02