ORIGINAL INSTRUCTIONS

18V Multi-tool

R18MT



Important!

It is essential that you read the instructions in this manual before assembling, operating and maintaining the product.

Subject to technical modification.

Safety, performance, and dependability have been given top priority in the design of your multi-tool.

INTENDED USE

The multi-tool is intended to be used only by adults who have read and understood the instructions and warnings in this manual and can be considered responsible for their actions.

The multi-tool is intended to be used:

- for sanding and finishing metal, wood, plastics, or similar materials using the sanding pad with the shaped abrasive sheets provided
- for scraping and plunge-cutting into non-ferrous metal, wood, plastics, plasterboard, etc. using the provided metallic cutting blades
- for cutting holes in walls to accommodate switches or power sockets

NOTE: correct accessories need to be used for different applications.

The multi-tool is intended to be operated indoors in dry, well illuminated and adequately ventilated conditions.

The multi-tool is not intended to be used on wet materials or surfaces.

Do not use the product in any way other than those stated for intended use.

GENERAL POWER TOOL SAFETY WARNINGS

⚠ WARNING

Read all safety warnings and all instructions. Failure to follow the warnings and instructions may result in electric shock, fire and/or serious injury.

Save all warnings and instructions for future reference.

The term “power tool’’ in the warnings refers to your mains-operated (corded) power tool or battery-operated (cordless) power tool.

1) WORK AREA SAFETY

- **Keep work area clean and well lit.** Cluttered or dark areas invite accidents.
- **Do not operate power tools in explosive atmospheres, such as in the presence of flammable liquids, gases or dust.** Power tools create sparks which may ignite the dust or fumes.
- **Keep children and bystanders away while operating a power tool.** Distractions can cause you to lose control.

2) ELECTRICAL SAFETY

- **Power tool plugs must match the outlet. Never modify the plug in any way. Do not use any adapter plugs with earthed (grounded) power tools.** Unmodified plugs and matching outlets will reduce risk of electric shock.
- **Avoid body contact with earthed or grounded surfaces, such as pipes, radiators, ranges and refrigerators.** There is an increased risk of electric shock if your body is earthed or grounded.
- **Do not expose power tools to rain or wet conditions.** Water entering a power tool will increase the risk of electric shock.
- **Do not abuse the cord. Never use the cord for carrying, pulling or unplugging the power tool. Keep cord away from heat, oil, sharp edges or moving parts.** Damaged or entangled cords increase the risk of electric shock.
- **When operating a power tool outdoors, use an extension cord suitable for outdoor use.** Use of a cord suitable for outdoor use reduces the risk of electric shock.
- **If operating a power tool in a damp location is unavoidable, use a residual current device (RCD) protected supply.** Use of an RCD reduces the risk of electric shock.

3) PERSONAL SAFETY

- **Stay alert, watch what you are doing and use common sense when operating a power tool. Do not use a power tool while you are tired or under the influence of drugs, alcohol or medication.** A moment of inattention while operating power tools may result in serious personal injury.
- **Use personal protective equipment. Always wear eye protection.** Protective equipment such as dust mask, non-skid safety shoes, hard hat or hearing protection used for appropriate conditions will reduce personal injuries.
- **Prevent unintentional starting. Ensure the switch is in the off-position before connecting to power source and/or battery pack, picking up or carrying the tool.** Carrying power tools with your finger on the switch or energising power tools that have the switch on invites accidents.
- **Remove any adjusting key or wrench before turning the power tool on.** A wrench or a key left attached to a rotating part of the power tool may result in personal injury.
- **Do not overreach. Keep proper footing and balance at all times.** This enables better control of the power tool in unexpected situations.
- **Dress properly. Do not wear loose clothing or jewellery. Keep your hair, clothing and gloves away from moving parts.** Loose clothes, jewellery or long hair can be caught in moving parts.
- **If devices are provided for the connection of dust extraction and collection facilities, ensure these are connected and properly used.** Use of dust collection can reduce dust-related hazards.

4) POWER TOOL USE AND CARE

- **Do not force the power tool. Use the correct power tool for your application.** The correct power tool will do the job better and safer at the rate for which it was designed.
- **Do not use the power tool if the switch does not turn it on and off.** Any power tool that cannot be controlled with the switch is dangerous and must be repaired.

- **Disconnect the plug from the power source and/ or the battery pack from the power tool before making any adjustments, changing accessories or storing power tools.** Such preventive safety measures reduce the risk of starting the power tool accidentally.
- **Store idle power tools out of the reach of children and do not allow persons unfamiliar with the power tool or these instructions to operate the power tool.** Power tools are dangerous in the hands of untrained users.
- **Maintain power tools. Check for misalignment or binding of moving parts, breakage of parts and any other condition that may affect the power tool's operation. If damaged, have the power tool repaired before use.** Many accidents are caused by poorly maintained power tools.
- **Keep cutting tools sharp and clean.** Properly maintained cutting tools with sharp cutting edges are less likely to bind and are easier to control.
- **Use the power tool, accessories and tool bits etc, in accordance with these instructions, taking into account the working conditions and the work to be performed.** Use of the power tool for operations different from those intended could result in a hazardous situation.

5) BATTERY TOOL USE AND CARE

- **Recharge only with the charger specified by the manufacturer.** A charger that is suitable for one type of battery pack may create a risk of fire when used with another battery pack.
- **Use power tools only with specifically designated battery packs.** Use of any other battery packs may create a risk of injury and fire.
- **When battery pack is not in use, keep it away from other metal objects, like paper clips, coins, keys, nails, screws or other small metal objects that can make a connection from one terminal to another.** Shorting the battery terminals together may cause burns or a fire.
- **Under abusive conditions, liquid may be ejected from the battery; avoid contact. If contact accidentally occurs, flush with water. If liquid contacts eyes, additionally seek medical help.** Liquid ejected from the battery may cause irritation or burns.

6) SERVICE

- **Have your power tool serviced by a qualified repair person using only identical replacement parts.** This will ensure that the safety of the power tool is maintained.

MULTI-TOOL SAFETY WARNINGS

- **Hold power tool by insulated gripping surfaces, when performing an operation where the cutting accessory may contact hidden wiring.** The cutting accessory may contact hidden wiring. Cutting accessory contacting a "live" wire may make exposed metal parts of the power tool "live" and could give the operator an electric shock.
- Always wear safety goggles while operating the tool. Wear a dust mask when dust is produced.

⚠ WARNING

Dust from certain paints, coatings, and materials may cause irritation or allergic reactions. Dust from wood such as oak, beech, MDF, and others are carcinogenic. Only qualified specialists should be allowed to use the product on materials containing asbestos.

⚠ WARNING

The product should never be connected to a power supply when assembling parts, making adjustments, cleaning, performing maintenance, or when not using it. Disconnecting the product from the power supply will prevent accidental starting that could cause serious injury.

- When working in walls, ceilings or floors, take care to avoid electric cables and gas or water pipes.

⚠ WARNING

Metallic accessories will become hot during use and could result in skin burns if contacted by the operator. Wear gloves when changing accessories.

Take care when setting down the tool between operations to prevent damage or injury.

- Do not use cutting accessories which are damaged, cracked or do not fit securely to the product.
- If available, fit the dust port and connect it to a vacuum device to remove dust from the work area and help prevent potential respiratory irritation and damage to the tool product.
- The multi-tool creates vibrations which move the accessory. The vibrations may cause discomfort if the product is operated for long periods of time. Take a rest often, especially if you feel discomfort in the arm, wrist, or fingers. Choose a speed setting which will get the work completed efficiently. Read the Residual Risks and Risk Reduction sections for more information on vibration-related injury.

TRANSPORTING LITHIUM BATTERIES

Transport the battery in accordance with local and national provisions and regulations.

Follow all special requirements on packaging and labelling when transporting batteries by a third party. Ensure that no batteries can come in contact with other batteries or conductive materials while in transport by protecting exposed connectors with insulating, non-conductive caps or tape. Do not transport batteries that are cracked or leaking. Check with the forwarding company for further advice.

RESIDUAL RISKS

Even when the product is used as prescribed, it is still impossible to completely eliminate certain residual risk factors. The following hazards may arise and the operator should pay special attention to avoid the following:

- Injury caused by dust
  - While using the product, considerable dust and fine particles will be produced. Use the dust port and connect a dust extraction vacuum during use.
  - Wear eye protection at all times.
  - Wear respiratory protection masks containing filters appropriate to the materials being worked. Ensure adequate workplace ventilation.
  - Do not eat, drink or smoke in the work area.
- Injury caused by noise and vibration
  - Wear ear protection.
  - Do not operate the product for long periods of time. See “Risk reduction”.
- Risk of electrocution if electric cables are cut
  - Always hold the product by designated handles. Do not touch the cutting blades or metal parts of the product.

RISK REDUCTION

It has been reported that vibrations from handheld tools may contribute to a condition called Raynaud’s Syndrome in certain individuals. Symptoms may include tingling, numbness and blanching of the fingers, usually apparent upon exposure to cold. Hereditary factors, exposure to cold and dampness, diet, smoking, and work practices are all thought to contribute to the development of these symptoms. There are measures that can be taken by the operator to possibly reduce the effects of vibration:

- Keep your body warm in cold weather. When operating the product, wear gloves to keep the hands and wrists warm. It is reported that cold weather is a major factor contributing to Raynaud’s Syndrome.
- After each period of operation, exercise to increase blood circulation.
- Take frequent work breaks. Limit the amount of exposure per day.

If you experience any of the symptoms of this condition, immediately discontinue use and see your doctor about these symptoms.

⚠ WARNING

Injuries may be caused, or aggravated, by prolonged use of a tool. When using any tool for prolonged periods, ensure you take regular breaks.

OPERATION

The product is supplied with an extra adapter for use with other brands of cutting, scraping, and sanding accessories. Do not use the adapter with the latest generation of RYOBI accessories supplied with your tool. For example, use the adapter with the letters “R&F” facing outwards if you wish to use earlier generation RYOBI, RIDGID or AEG accessories. The adapter may be turned over for use with other brands of accessories.

- Secure workpieces that can move with a clamp to prevent movement during sanding or cutting operations. Do not hold the workpiece by hand. An inadvertent slip while operating the product may cause serious personal injury.
- When making a plunge cut into soft materials like wood and plasterboard using the cutting accessory, gradually bring the vibrating blade to the workpiece. Do not push the vibrating blade hard into the material to be cut. Let the product do the work and concentrate on keeping the product and the cutting accessory stable in the position you wish to make the cut.
- Use the depth/ height gauge to help set your depth of cut or prevent cutting too deeply into the material.
- Take extra care when cutting in non-ferrous metals. The vibrating cutting blade may skip around before beginning the cut. If necessary, drill some holes along the line to be cut before you start cutting.
- If the cutting accessories become jammed in the workpiece, switch off the product and disconnect from the power supply. If the cutting accessory cannot be removed easily, allow the cutting accessory to adequately cool before releasing the cutting accessory from the product. Wear gloves and use hand tools, such as pliers or wrench, to remove the cutting accessory from the workpiece.

OVERCURRENT PROTECTION

When overcurrent is detected, the product will automatically switch off.

If the product stops working, release the trigger and then apply again. The product should again start working.

MAINTENANCE

⚠ WARNING

The product should never be connected to a power supply when you are assembling parts, making adjustments, cleaning, performing maintenance, or when the product is not in use. Disconnecting the product will prevent accidental starting that could cause serious injury.

- When servicing, use only original manufacturer’s replacement parts. Use of any other parts may create a hazard or cause product damage.

⚠ WARNING

For greater safety and reliability, all repairs should be performed by an authorised Ryobi service centre.

GENERAL

Avoid using solvents when cleaning plastic parts. Most plastics are susceptible to various types of commercial solvents and may be damaged by their use. Use clean

cloths to remove dirt, carbon dust, etc.

⚠ WARNING

Do not, at any time, let brake fluids, gasoline, petroleum-based products, and penetrating oils, come in contact with plastic parts. They contain chemicals that can damage, weaken, or destroy plastic.

The dust from plaster and wall board is abrasive and may cause premature failure of the product if it is allowed to enter the motor area. Always use the dust extraction accessory connected to a vacuum. Thoroughly clean the product after use by using a brush and a vacuum. Take care not to push dirt into the ventilation openings. Beware of using compressed air to clean the product because dust and grit can cause serious eye injury.

LUBRICATION

All of the bearings in the product are lubricated with a sufficient amount of high grade lubricant for the life span of the product under normal operating conditions. Therefore, no further lubrication is required.

ENVIRONMENTAL PROTECTION



Recycle raw materials instead of disposing of as waste. The machine, accessories and packaging should be sorted for environment-friendly recycling.

SYMBOLS ON THE PRODUCT



Safety alert



Regulatory Compliance Mark (RCM). Product meets applicable regulatory requirements.

n_o No-load speed

V Volts

Direct current



Please read the instructions carefully before starting the machine.



Wood – Plunge and flush cuts



Non-ferrous metal – Plunge and flush cuts



Plastics – Plunge and flush cuts



Wear eye, hearing and respiratory protection.



To reduce the risk of injury or damage, avoid contact with any hot surface.



Waste electrical products should not be disposed of with household waste. Please recycle where facilities exist. Check with your local authority or retailer for recycling advice.

SYMBOLS IN THIS MANUAL



Note



Parts or accessories sold separately



Unlock



Lock



Speed, minimum



Speed, maximum

The following signal words and meanings are intended to explain the levels of risk associated with this product:

⚠ DANGER
Indicates an imminently hazardous situation, which, if not avoided, will result in death or serious injury.

⚠ WARNING
Indicates a potentially hazardous situation, which, if not avoided, could result in death or serious injury.

⚠ CAUTION
Indicates a potentially hazardous situation, which, if not avoided, may result in minor or moderate injury.

CAUTION
(Without Safety Alert Symbol) Indicates a situation that may result in property damage.

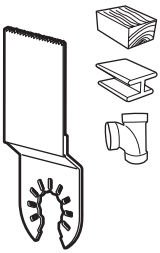

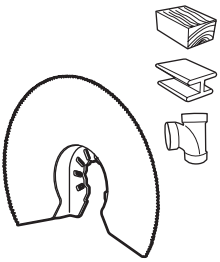

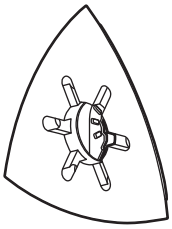

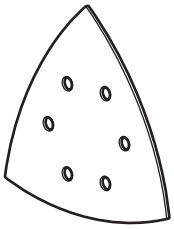

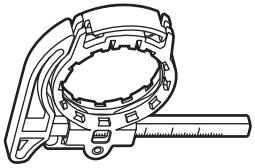

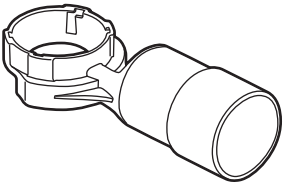

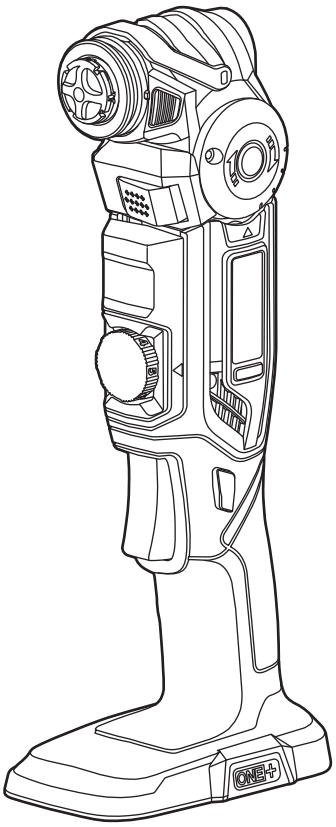
ONE+






RYOBI

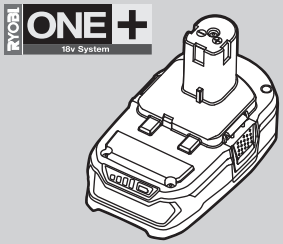
RYOBI
ONE+
18v System

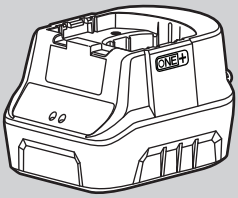
ONE+

KNOW YOUR PRODUCT

1. Blade clamp
2. Blade lock/ release lever
3. Head angle adjusting release button
4. Speed control
5. On/ off switch
6. Lock on switch
7. Plunge cut blade
8. Grout blade
9. Sanding pad
10. Sandpaper
11. Adaptor
12. Battery port
13. Dust port
14. Depth gauge

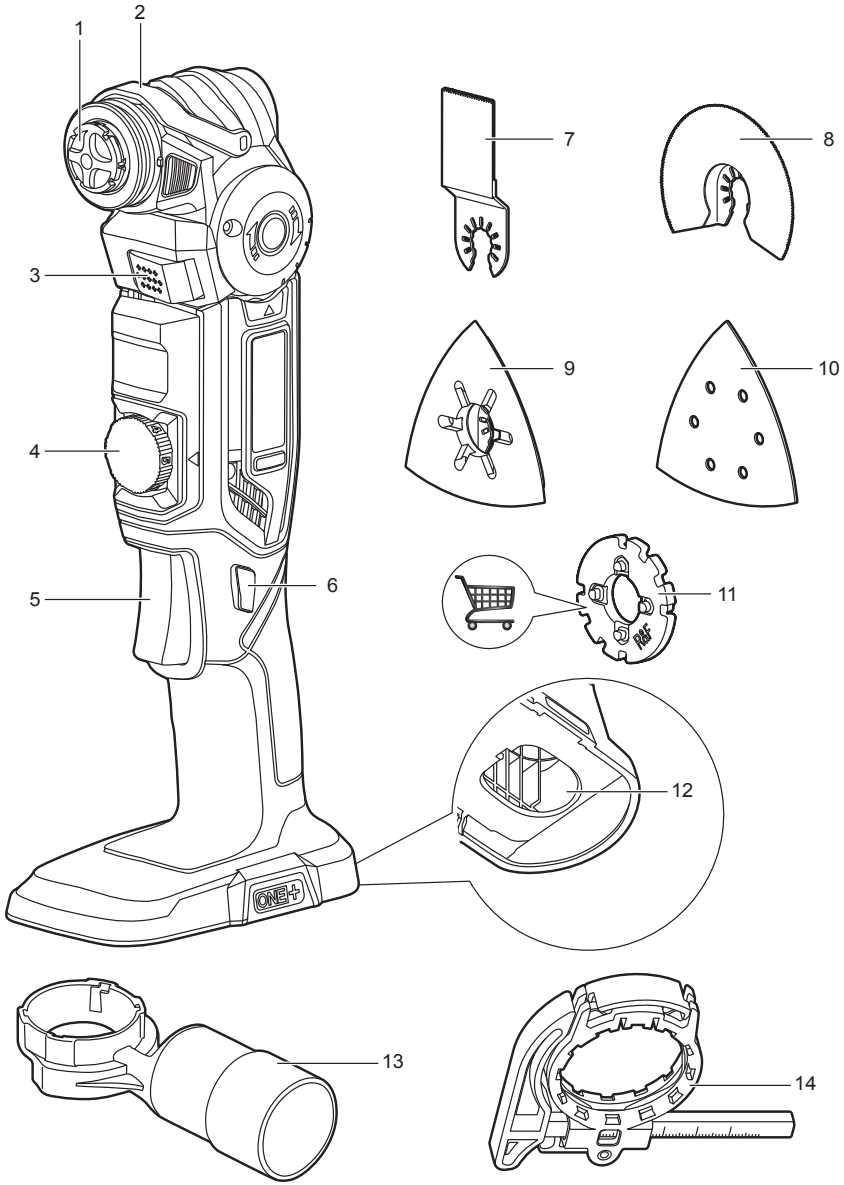

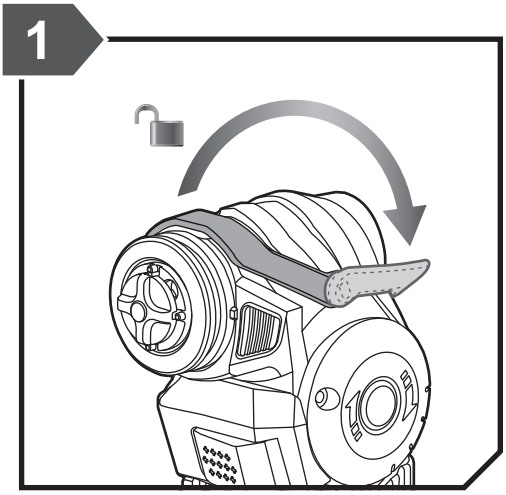
1

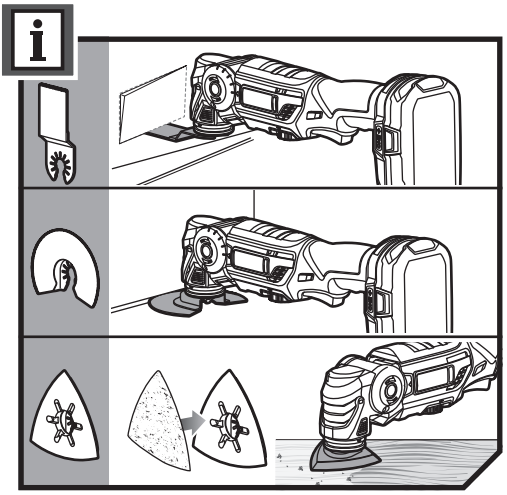
i

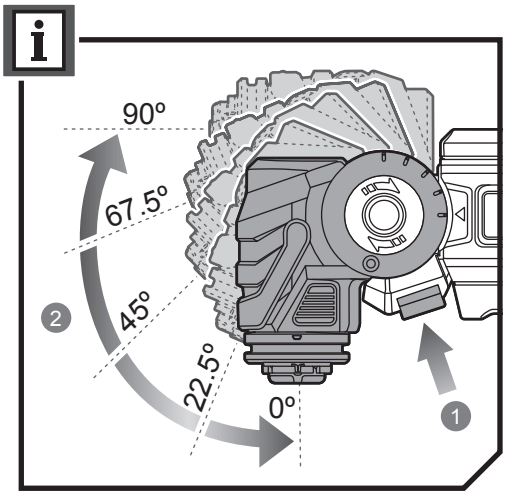
i
90°
67.5°
45°
22.5°
0°
2
1

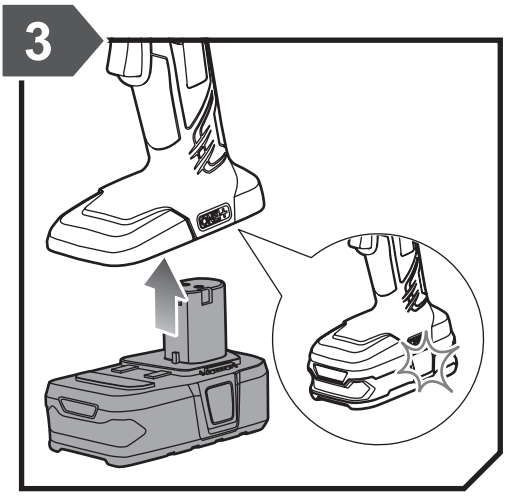
3

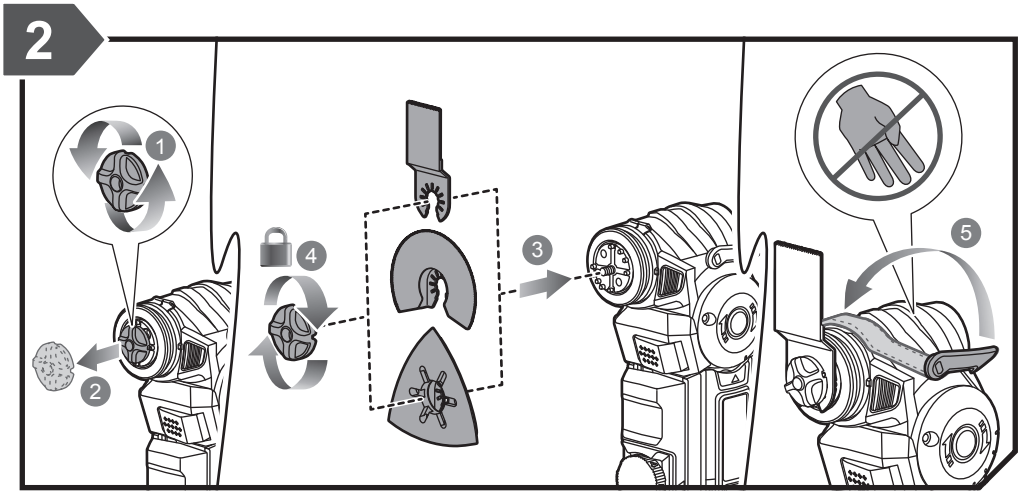
2
1
2
4
3
5

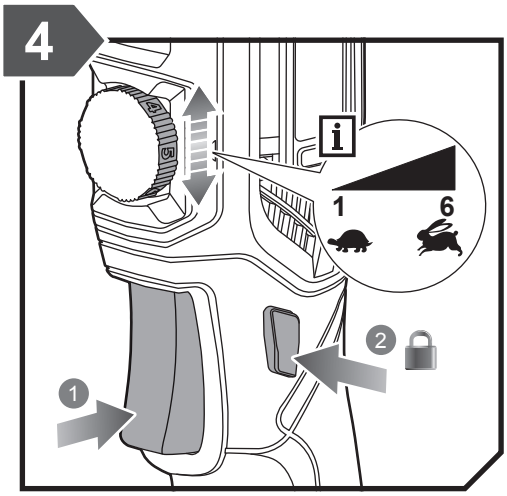
4
i
1
6
1
2

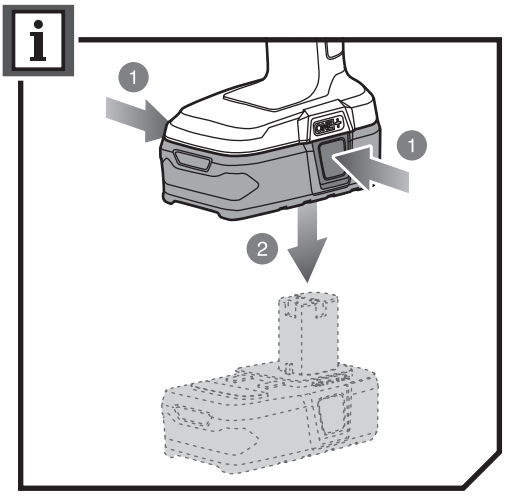
i
1
1
2

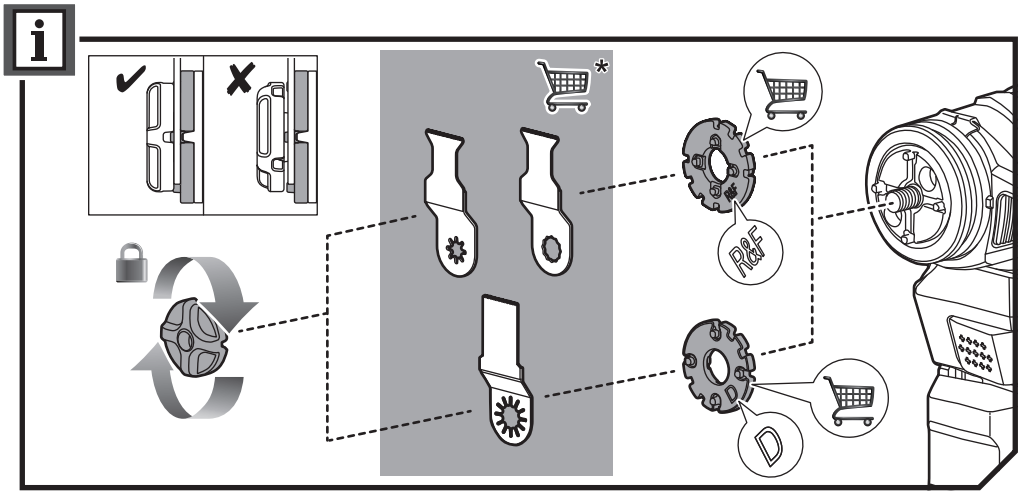

* Compatible with blades of other brands

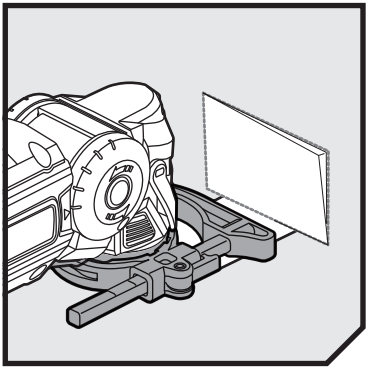

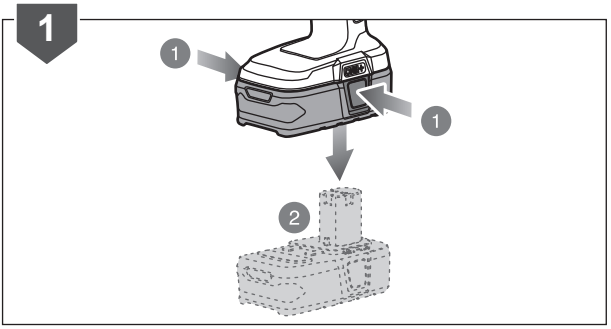
1
1
1
2

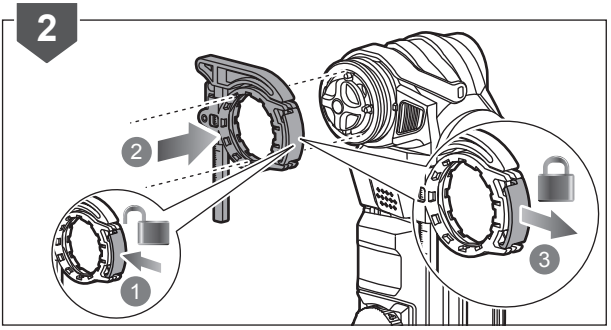
2
1
3

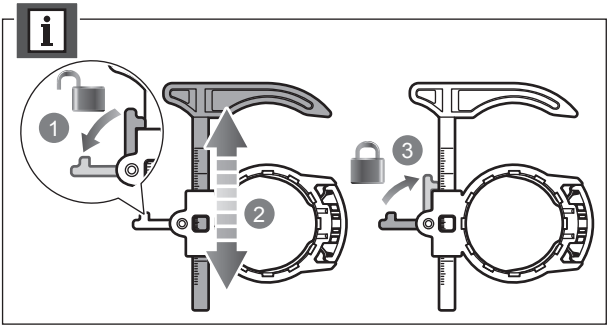
1
2
3

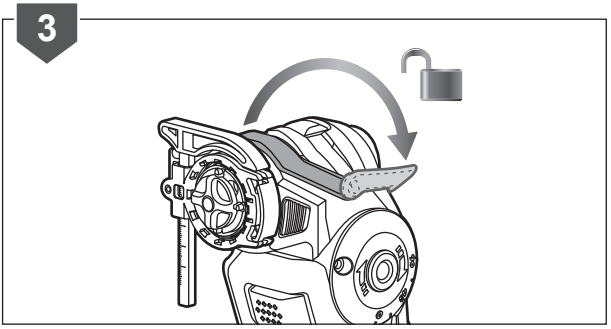
3

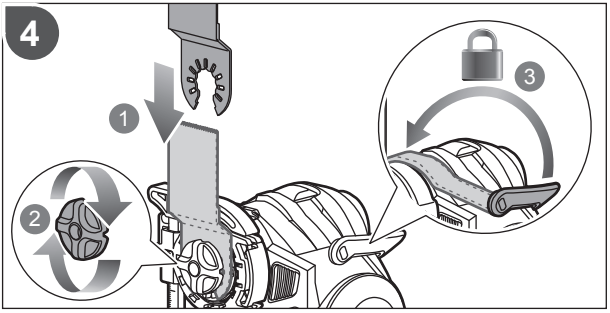
4
1
2
3

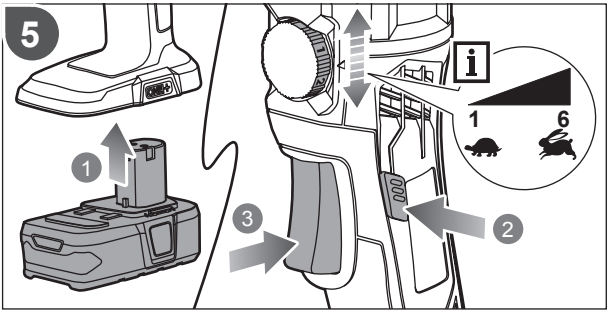
5
1
2
3
1
6

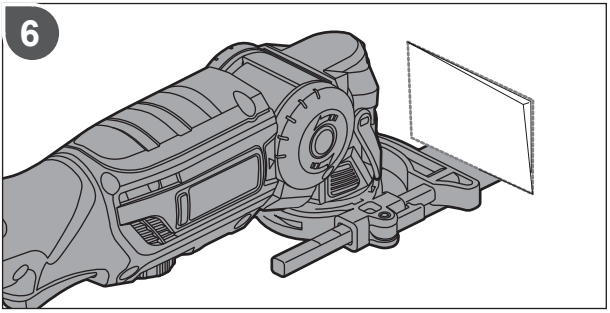
6

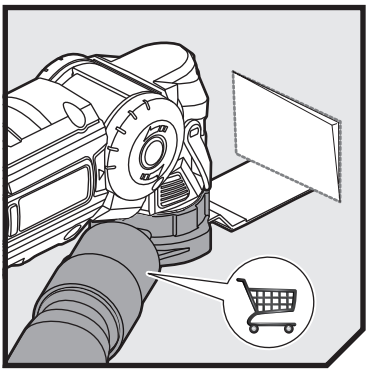

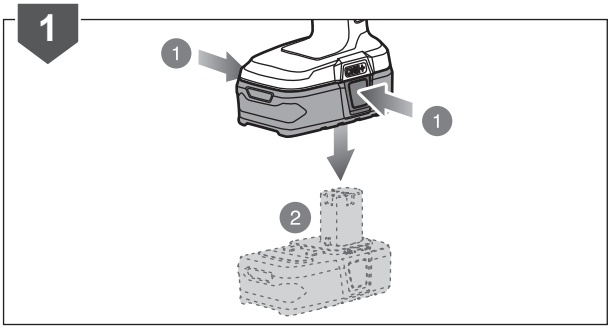

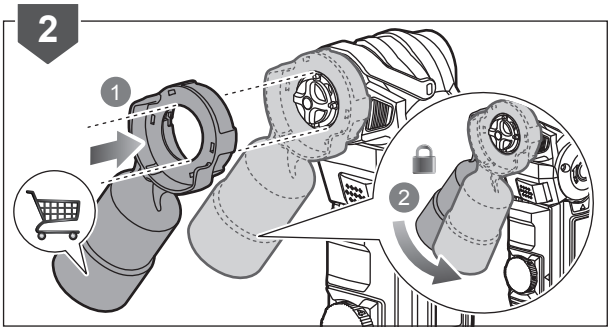

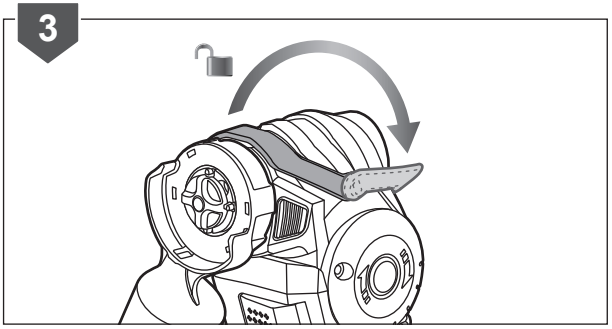

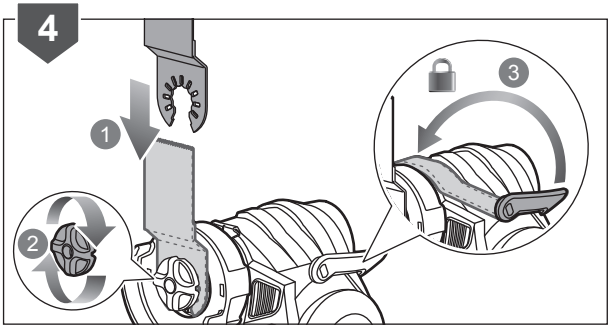

20170504v1b

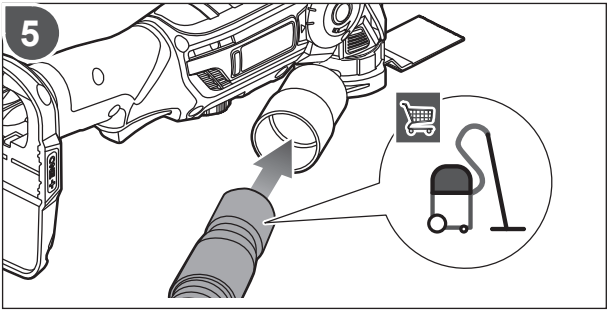
5

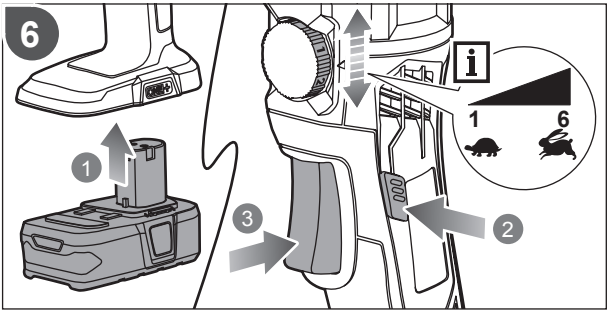
6
1
6
1
2
3

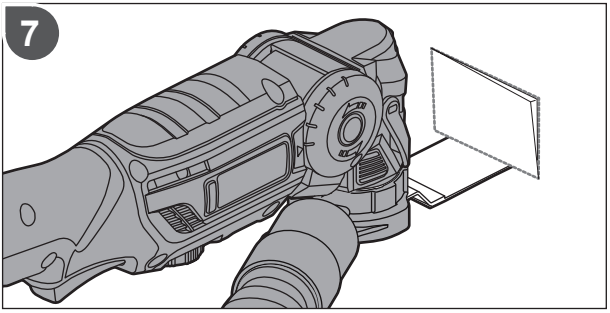
7

PRODUCT SPECIFICATIONS

18V multi-tool	
Model	R18MT
Voltage	18 V ⎓
No load speed	10000 - 20000 min^{-1}
Oscillation angle	3.2 °

BATTERY AND CHARGER

Model	Compatible battery pack (not included)	Compatible charger (not included)
Lithium-Ion	RB18L13	BCS618G
	RB18L15	BCL14181H
	RB18L20	BCL14183H
	RB18L25	BCL1418IV*
	RB18L26	RC18150U
	RB18L40	RC18627U
	RB18L50	RC18120

***** for vehicles with 12V DC outlets



Imported by:

Techtronic Industries (Australia) Pty. Ltd.
31 Gilby Road,
Mt Waverley, VIC 3149, Australia

Techtronic Industries New Zealand Ltd.
2 Landing Drive, Auckland Airport,
Mangere, New Zealand 2022