ORIGINAL INSTRUCTIONS

Cut-off Tool

RCT18C



IMPORTANT!

It is essential that you read the instructions in this manual before assembling, operating, and maintaining the product.

Subject to technical modifications.

Safety, performance, and dependability have been given top priority in the design of your cut-off tool.

INTENDED USE

The cut-off tool is intended to be used only by adults who have read and understood the instructions and warnings in this manual, and can be considered responsible for their actions.

The product is designed for cutting different types of materials. Applications of the product require different types of cutting wheels. Use the chart below to choose the correct cutting wheel suitable for the type of material.

Wheel type	Recommended for cutting
Carbide abrasive wheel	Drywall, plastic
Abrasive cut-off wheel	Steel, stainless steel, non-ferrous materials
Diamond abrasive wheel	Tile, concrete, brick, ceramics, fibre cement

Do not use the product for any other purpose. Use of the product for operations different from intended could result in a hazardous situation.

GENERAL POWER TOOL SAFETY WARNINGS

⚠ **WARNING! Read all safety warnings, instructions, illustrations and specifications provided with this power tool.** Failure to follow all instructions listed below may result in electric shock, fire and/or serious injury.

Save all warnings and instructions for future reference.

The term “power tool’’ in the warnings refers to your mains-operated (corded) power tool or battery-operated (cordless) power tool.

WORK AREA SAFETY

- **Keep work area clean and well lit.** Cluttered or dark areas invite accidents.
- **Do not operate power tools in explosive atmospheres, such as in the presence of flammable liquids, gases or dust.** Power tools create sparks which may ignite the dust or fumes.
- **Keep children and bystanders away while operating a power tool.** Distractions can cause you to lose control.

ELECTRICAL SAFETY

- **Power tool plugs must match the outlet. Never modify the plug in any way. Do not use any adapter plugs with earthed (grounded) power tools.** Unmodified plugs and matching outlets will reduce risk of electric shock.
- **Avoid body contact with earthed or grounded surfaces, such as pipes, radiators, ranges and refrigerators.** There is an increased risk of electric shock if your body is earthed or grounded.
- **Do not expose power tools to rain or wet conditions.** Water entering a power tool will increase the risk of electric shock.
- **Do not abuse the cord. Never use the cord for carrying, pulling or unplugging the power tool. Keep cord away from heat, oil, sharp edges or moving parts.** Damaged or entangled cords increase the risk of electric shock.
- **When operating a power tool outdoors, use an extension cord suitable for outdoor use.** Use of a cord suitable for outdoor use reduces the risk of electric shock.
- **If operating a power tool in a damp location is unavoidable, use a residual current device (RCD) protected supply.** Use of an RCD reduces the risk of electric shock.

PERSONAL SAFETY

- **Stay alert, watch what you are doing and use common sense when operating a power tool. Do not use a power tool while you are tired or under the influence of drugs, alcohol or medication.** A moment of inattention while operating power tools may result in serious personal injury.
- **Use personal protective equipment. Always wear eye protection.** Protective equipment such as dust mask, non-skid safety shoes, hard hat or hearing protection used for appropriate conditions will reduce personal injuries.
- **Prevent unintentional starting. Ensure the switch is in the off-position before connecting to power source and/or battery pack, picking up or carrying the tool.** Carrying power tools with your finger on the switch or energising power tools that have the switch on invites accidents.
- **Remove any adjusting key or wrench before turning the power tool on.** A wrench or a key left attached to a rotating part of the power tool may result in personal injury.
- **Do not overreach. Keep proper footing and balance at all times.** This enables better control of the power tool in unexpected situations.
- **Dress properly. Do not wear loose clothing or jewellery. Keep your hair and clothing away from moving parts.** Loose clothes, jewellery or long hair can be caught in moving parts.
- **If devices are provided for the connection of dust extraction and collection facilities, ensure these are connected and properly used.** Use of dust collection can reduce dust-related hazards.
- **Do not let familiarity gained from frequent use of tools allow you to become complacent and ignore tool safety principles.** A careless action can cause severe injury within a fraction of a second.

POWER TOOL USE AND CARE

- **Do not force the power tool. Use the correct power tool for your application.** The correct power tool will do the job better and safer at the rate for which it was designed.
- **Do not use the power tool if the switch does not turn it on and off.** Any power tool that cannot be controlled with the switch is dangerous and must be repaired.
- **Disconnect the plug from the power source and/ or remove the battery pack, if detachable, from the power tool before making any adjustments, changing accessories, or storing power tools.** Such preventive safety measures reduce the risk of starting the power tool accidentally.
- **Store idle power tools out of the reach of children and do not allow persons unfamiliar with the power tool or these instructions to operate the power tool.** Power tools are dangerous in the hands of untrained users.
- **Maintain power tools and accessories. Check for misalignment or binding of moving parts, breakage of parts and any other condition that may affect the power tool's operation. If damaged, have the power tool repaired before use.** Many accidents are caused by poorly maintained power tools.
- **Keep cutting tools sharp and clean.** Properly maintained cutting tools with sharp cutting edges are less likely to bind and are easier to control.
- **Use the power tool, accessories and tool bits etc. in accordance with these instructions, taking into account the working conditions and the work to be performed.** Use of the power tool for operations different from those intended could result in a hazardous situation.
- **Keep handles and grasping surfaces dry, clean and free from oil and grease.** Slippery handles and grasping surfaces do not allow for safe handling and control of the tool in unexpected situations.

BATTERY TOOL USE AND CARE

- **Recharge only with the charger specified by the manufacturer.** A charger that is suitable for one type of battery pack may create a risk of fire when used with another battery pack.
- **Use power tools only with specifically designated battery packs.** Use of any other battery packs may create a risk of injury and fire.
- **When battery pack is not in use, keep it away from other metal objects, like paper clips, coins, keys, nails, screws or other small metal objects, that can make a connection from one terminal to another.** Shorting the battery terminals together may cause burns or a fire.
- **Under abusive conditions, liquid may be ejected from the battery; avoid contact. If contact accidentally occurs, flush with water. If liquid contacts eyes, additionally seek medical help.** Liquid ejected from the battery may cause irritation or burns.
- **Do not use a battery pack or tool that is damaged or modified.** Damaged or modified batteries may exhibit unpredictable behaviour resulting in fire, explosion or risk of injury.
- **Do not expose a battery pack or tool to fire or excessive temperature.** Exposure to fire or temperature above 130°C may cause explosion.
- **Follow all charging instructions and do not charge the battery pack or tool outside the temperature range specified in the instructions.** Charging improperly or at temperatures outside the specified range may damage the battery and increase the risk of fire.

SERVICE

- **Have your power tool serviced by a qualified repair person using only identical replacement parts.** This will ensure that the safety of the power tool is maintained.
- **Never service damaged battery packs.** Service of battery packs should only be performed by the manufacturer or authorized service providers.

CUT-OFF TOOL SAFETY WARNINGS

- **The guard provided with the tool must be securely attached to the power tool and positioned for maximum safety, so the least amount of wheel is exposed towards the operator. Position yourself and bystanders away from the plane of the rotating wheel.** The guard helps to protect operator from broken wheel fragments and accidental contact with wheel.
- **Use only bonded reinforced or diamond cut-off wheels for your power tool.** Just because an accessory can be attached to your power tool, it does not assure safe operation.
- **The rated speed of the accessory must be at least equal to the maximum speed marked on the power tool.** Accessories running faster than their rated speed can break and fly apart.
- **Wheels must be used only for recommended applications. For example, do not grind with the side of cut-off wheel.** Abrasive cut-off wheels are intended for peripheral grinding. Side forces applied to these wheels may cause them to shatter.
- **Always use undamaged wheel flanges that are of correct diameter for your selected wheel.** Proper wheel flanges support the wheel thus reducing the possibility of wheel breakage.
- **Do not use worn down reinforced wheels from larger power tools.** Wheels intended for a larger power tool are not suitable for the higher speed of a smaller tool and may burst.
- **The outside diameter and the thickness of your accessory must be within the capacity rating of your power tool.** Incorrectly sized accessories cannot be adequately guarded or controlled.
- **The arbour size of wheels and flanges must properly fit the spindle of the power tool.** Wheels and flanges with arbour holes that do not match the

mounting hardware of the power tool will run out of balance, vibrate excessively and may cause loss of control.

- **Do not use damaged wheels. Before each use, inspect the wheels for chips and cracks. If power tool or wheel is dropped, inspect for damage or install an undamaged wheel. After inspecting and installing the wheel, position yourself and bystanders away from the plane of the rotating wheel and run the power tool at maximum no load speed for one minute.** Damaged wheels will normally break apart during this test time.
- **Wear personal protective equipment. Depending on application, use face shield, safety goggles or safety glasses. As appropriate, wear dust mask, hearing protectors, gloves and shop apron capable of stopping small abrasive or workpiece fragments.** The eye protection must be capable of stopping flying debris generated by various operations. The dust mask or respirator must be capable of filtrating particles generated by your operation. Prolonged exposure to high intensity noise may cause hearing loss.
- **Keep bystanders a safe distance away from work area. Anyone entering the work area must wear personal protective equipment.** Fragments of workpiece or of a broken wheel may fly away and cause injury beyond immediate area of operation.
- **Hold the power tool by insulated gripping surfaces only, when performing an operation where the cutting accessory may contact hidden wiring.** Cutting accessory contacting a "live" wire may make exposed metal parts of the power tool "live" and could give the operator an electric shock.
- **Never lay the power tool down until the accessory has come to a complete stop.** The spinning wheel may grab the surface and pull the power tool out of your control.
- **Do not run the power tool while carrying it at your side.** Accidental contact with the spinning accessory could snag your clothing, pulling the accessory into your body.
- **Regularly clean the power tool's air vents.** The motor's fan will draw the dust inside the housing and excessive accumulation of powdered metal may cause electrical hazards.
- **Do not operate the power tool near flammable materials.** Sparks could ignite these materials.

Kickback and related warnings

Kickback is a sudden reaction to a pinched or snagged rotating wheel. Pinching or snagging causes rapid stalling of the rotating wheel which in turn causes the uncontrolled power tool to be forced in the direction opposite of the wheel's rotation at the point of the binding.

For example, if an abrasive wheel is snagged or pinched by the workpiece, the edge of the wheel that is entering into the pinch point can dig into the surface of the material causing the wheel to climb out or kick out. The wheel may either jump toward or away from the operator, depending on direction of the wheel's movement at the point of pinching. Abrasive wheels may also break under these conditions.

Kickback is the result of power tool misuse and/or incorrect operating procedures or conditions and can be avoided by taking proper precautions as given below.

- **Maintain a firm grip on the power tool and position your body and arm to allow you to resist kickback forces. Always use auxiliary handle, if provided, for maximum control over kickback or torque reaction during start-up.** The operator can control torque reactions or kickback forces, if proper precautions are taken.
- **Never place your hand near the rotating accessory.** Accessory may kickback over your hand.
- **Do not position your body in line with the rotating wheel.** Kickback will propel the tool in direction opposite to the wheel's movement at the point of snagging.
- **Use special care when working corners, sharp edges etc. Avoid bouncing and snagging the accessory.** Corners, sharp edges or bouncing have a tendency to snag the rotating accessory and cause loss of control or kickback.
- **Do not attach a saw chain, woodcarving blade, segmented diamond wheel with a peripheral gap greater than 10 mm or toothed saw blade.** Such blades create frequent kickback and loss of control.
- **Do not "jam" the wheel or apply excessive pressure. Do not attempt to make an excessive depth of cut.** Overstressing the wheel increases the loading and susceptibility to twisting or binding of the wheel in the cut and the possibility of kickback or wheel breakage.
- **When wheel is binding or when interrupting a cut for any reason, switch off the power tool and hold the power tool motionless until the wheel comes to a complete stop. Never attempt to remove the wheel from the cut while the wheel is in motion otherwise kickback may occur.** Investigate and take corrective action to eliminate the cause of wheel binding.
- **Do not restart the cutting operation in the workpiece. Let the wheel reach full speed and carefully re-enter the cut.** The wheel may bind, walk up or kickback if the power tool is restarted in the workpiece.
- **Support panels or any oversized workpiece to minimize the risk of wheel pinching and kickback.** Large workpieces tend to sag under their own weight. Supports must be placed under the workpiece near the line of cut and near the edge of the workpiece on both sides of the wheel.
- **Use extra caution when making a "pocket cut" into existing walls or other blind areas.** The protruding wheel may cut gas or water pipes, electrical wiring or objects that can cause kickback.

ADDITIONAL SAFETY WARNINGS

- The product is not intended for use by persons (including children) with reduced physical, sensory or mental capabilities, or lack of experience and knowledge, unless they have been given supervision or instruction concerning use of the product by a person responsible for their safety. Children should be supervised to ensure

that they do not play with the product.

- Clamp workpiece with a clamping device. Unclamped workpieces can cause severe injury and damage.
- Injuries may be caused, or aggravated, by prolonged use of a tool. When using any tool for prolonged periods, ensure you take regular breaks.
- The product will restart automatically if stalled. Switch off the product immediately if it stalls. Do not switch on the product again while it is still stalled, as doing so could trigger a sudden recoil with a high reactive force. Determine why the product stalled and rectify this, paying heed to the safety instructions.
- Ambient temperature range for tool during operation is between 0 ˚C and 40˚ C.
- Ambient temperature range for tool storage is between 0 ˚C and 40˚ C.
- The recommended ambient temperature range for the charging system during charging is between 10 ˚C and 38˚ C.

ADDITIONAL BATTERY SAFETY WARNINGS

- To reduce the risk of fire, personal injury, and product damage due to a short circuit, never immerse your tool, battery pack or charger in fluid or allow a fluid to flow inside them. Corrosive or conductive fluids, such as seawater, certain industrial chemicals, and bleach or bleach-containing products, etc., can cause a short circuit.
- Ambient temperature range for battery during use is between 0°C and 40°C.
- Ambient temperature range for battery storage is between 0°C and 20°C.

TRANSPORTING LITHIUM BATTERIES

Transport the battery in accordance with local and national provisions and regulations.

Follow all special requirements on packaging and labelling when transporting batteries by a third party. Ensure that no batteries can come in contact with other batteries or conductive materials while in transport by protecting exposed connectors with insulating, non-conductive caps or tape. Do not transport batteries that are cracked or leaking. Check with the forwarding company for further advice.

MAINTENANCE

- The product should never be connected to a power supply when assembling parts, making adjustments, cleaning, performing maintenance, or when the product is not in use. Disconnecting the product from the power supply will prevent accidental starting that could cause serious injury.
- When servicing, use only original manufacturer's replacement parts, accessories and attachments. Use of any other parts may create a hazard or cause product damage.
- Avoid using solvents when cleaning plastic parts. Most plastics are susceptible to various types of commercial solvents and may be damaged by their use. Use clean cloths to remove dirt, carbon dust, etc.
- Do not at any time let brake fluids, gasoline, petroleum-based products, penetrating oils, etc., come in contact with plastic parts. Chemicals can damage, weaken or destroy plastic which may result in serious personal injury.
- For greater safety and reliability, all repairs should be performed by an authorised service centre.

SYMBOLS ON THE PRODUCT


Safety Alert

V Volts

n_o No-load speed

min^{-1} Revolutions or reciprocations per minute

Direct current

Ø Diameter


EurAsian Conformity Mark


Ukrainian mark of conformity


Please read the instructions carefully before starting the machine.


Wear eye protection


Wear eye, hearing and respiratory protection.


Not for wet grinding or cutting


Wear ear protection


Wear dust mask


Wear safety hand gloves


Do not use chipped, cracked or defective grinding wheel


Do not use for cutting

Waste electrical products should not be disposed of with household waste. Please recycle where facilities exist. Check with your Local Authority or retailer for recycling advice.

SYMBOLS IN THIS MANUAL

Note

Parts or accessories sold separately

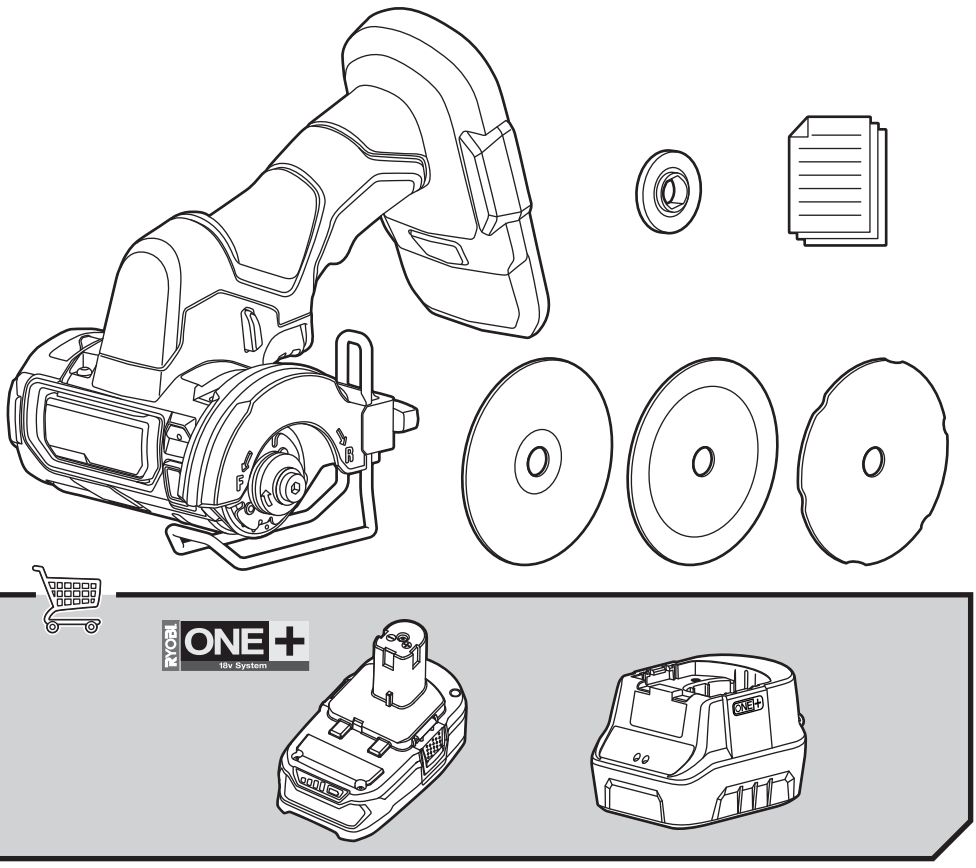

KNOW YOUR PRODUCT

1. Handle, insulated gripping surface
2. Hex key
3. Blade direction selector
4. Switch trigger
5. LED light
6. Spindle lock button
7. Wheel guard
8. 9.5 mm inner washer
9. 11.1 mm inner washer
10. Battery port
11. Cutting depth adjustment knob
12. Flange screw
13. Base support
14. Abrasive cut-off wheel
15. Carbide abrasive wheel
16. Diamond abrasive wheel

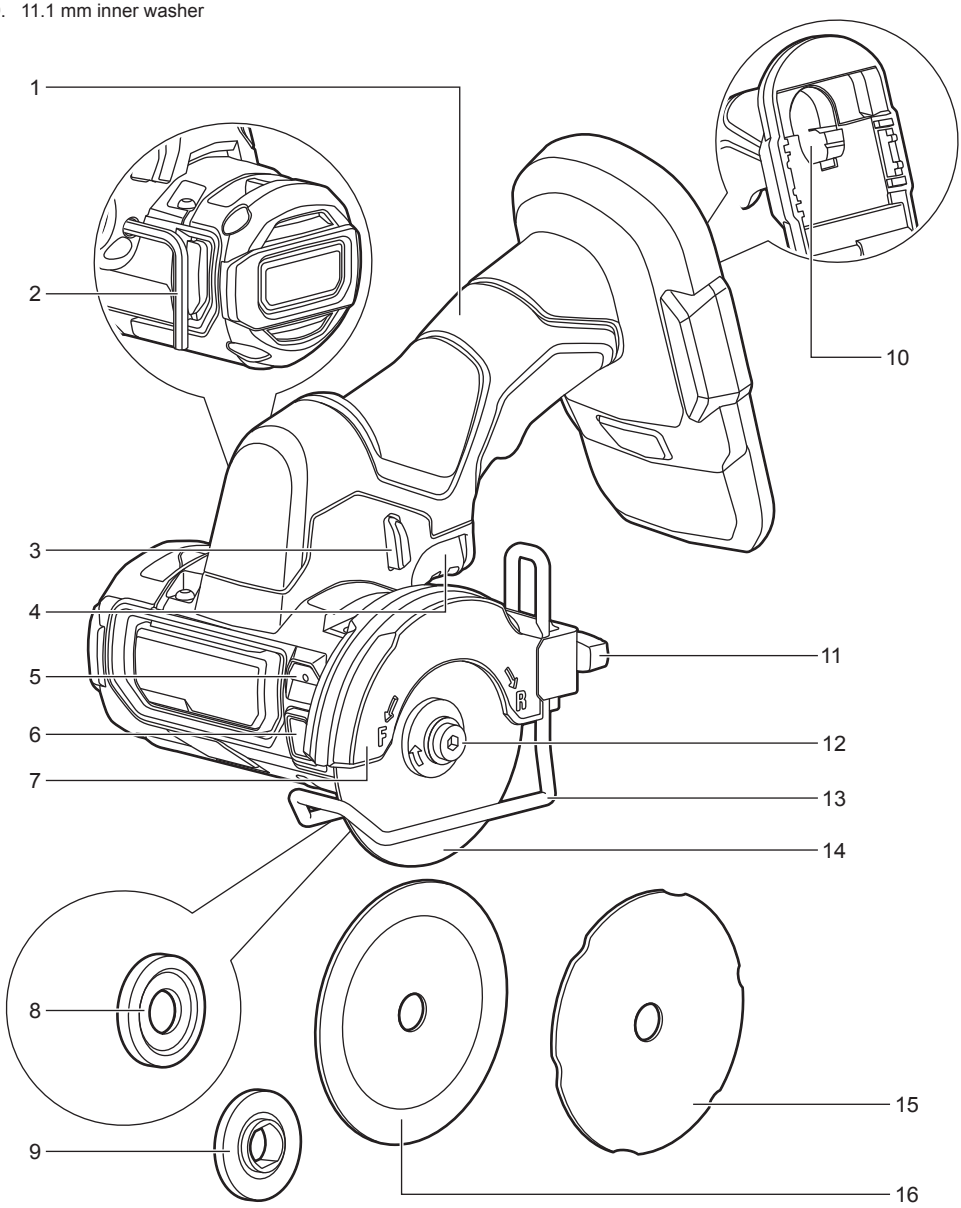

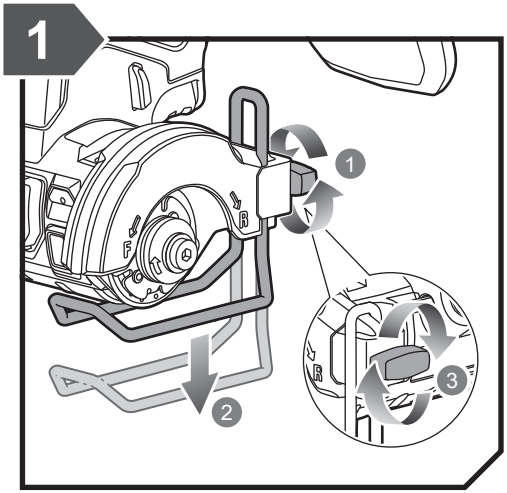
1
1
2
3

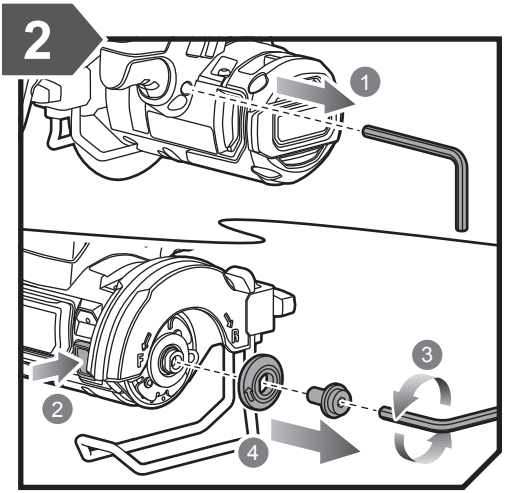
2
1
2
3
4

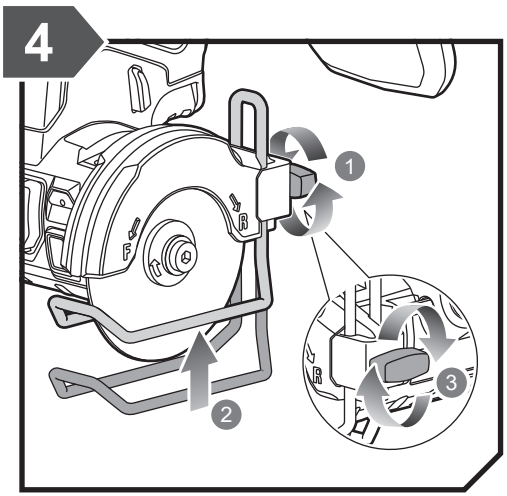
4
1
2
3

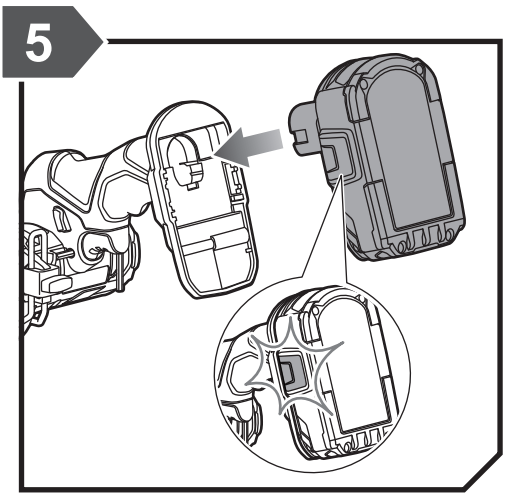
5

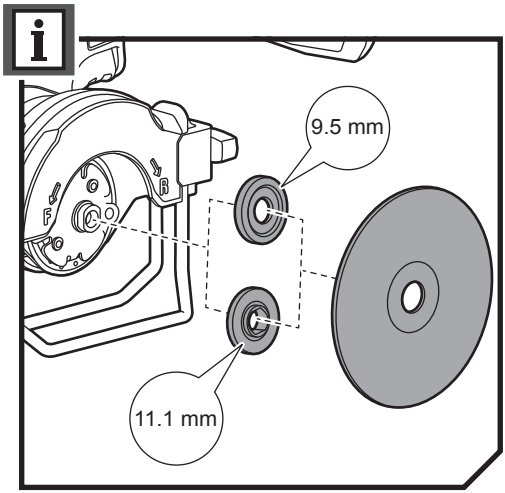
9.5 mm
11.1 mm

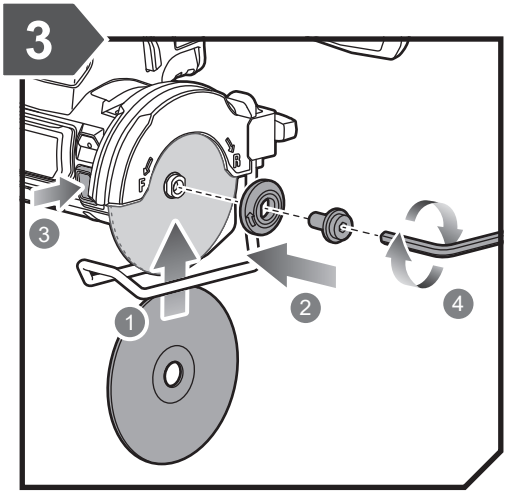
3
1
2
3
4

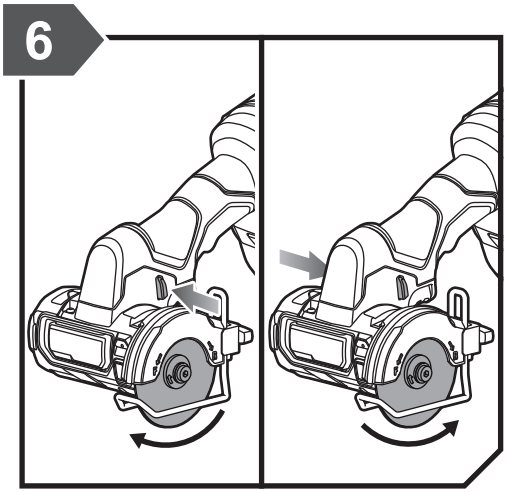
6

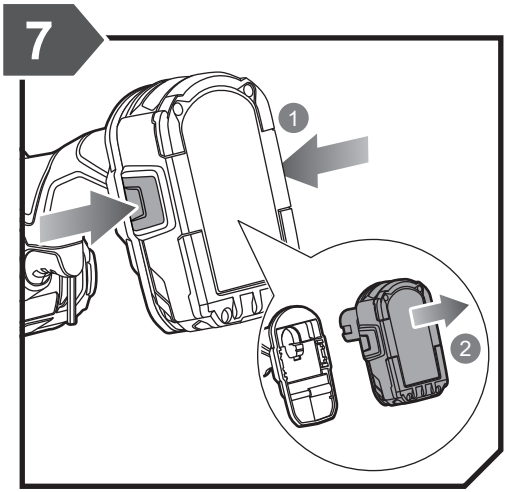
7
1
2

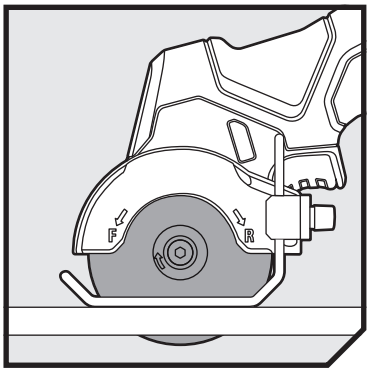
F
R

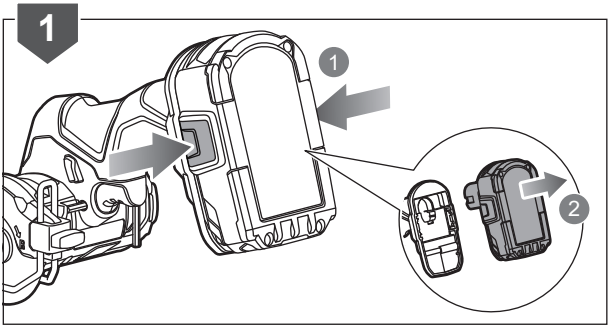
1
1
2

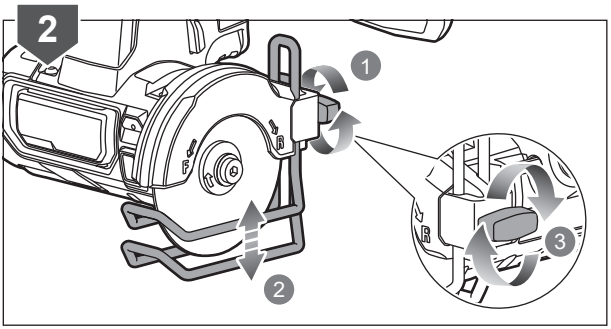
2
1
2
3

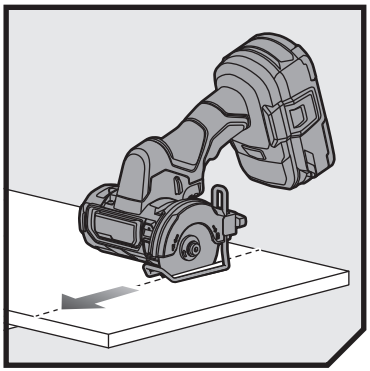

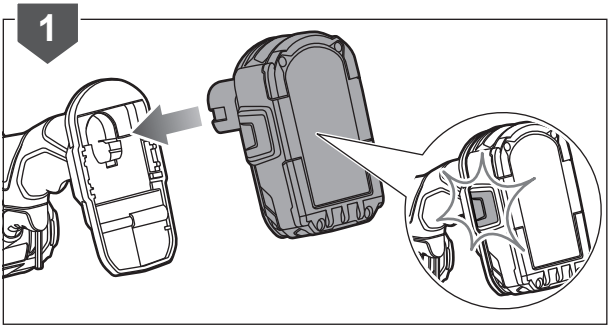
1

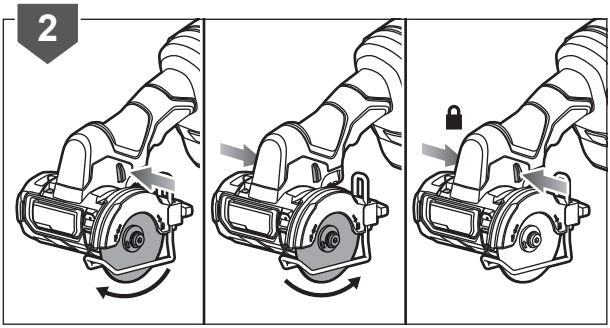
2

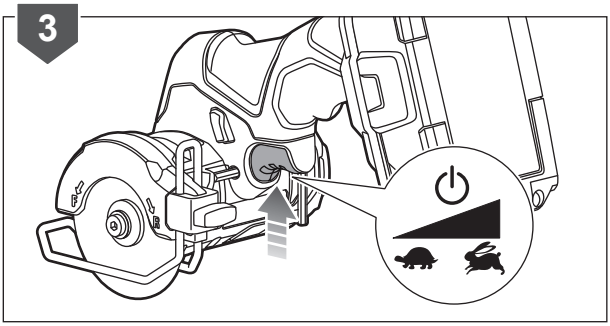
3

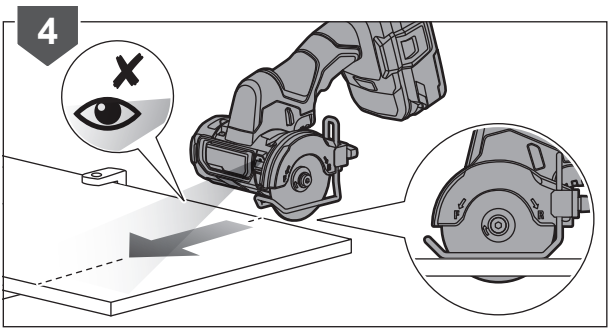
4

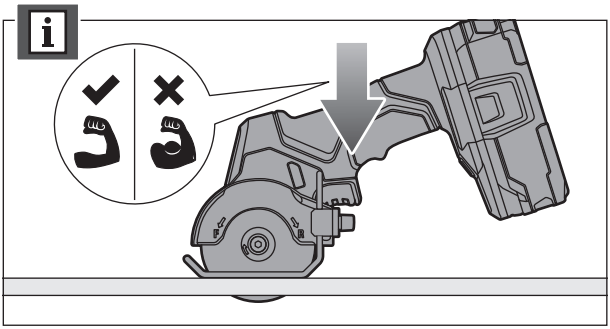

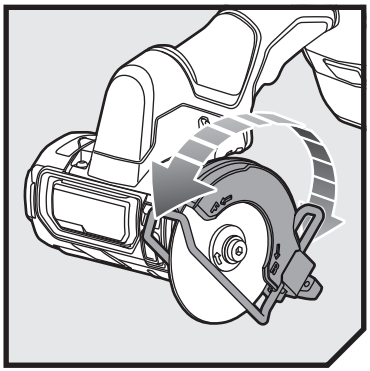

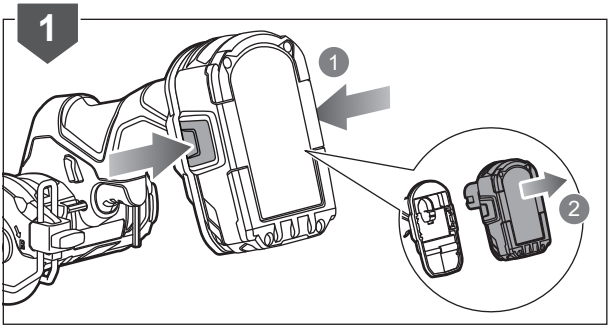
1
1
2

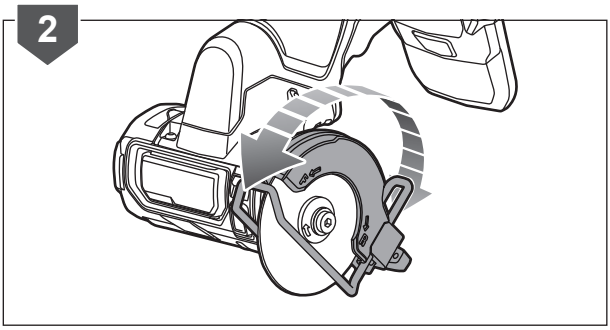
2

PRODUCT SPECIFICATIONS

Cut-off tool	
Model	RCT18C
Voltage	18 V ⎓
Blade diameter	76 mm
Blade arbor	9.5 / 11.1 mm
No-load speed	20000 min^{-1}
Blade thickness	1 - 2.5 mm
Maximum cutting depth	15.7 mm
Weight - excluding battery pack	0.9 kg
Measured sound values determined according to EN 60745:	
A-weighted sound pressure level	L_{pA} = 88 dB(A)
Uncertainty K	3 dB(A)
A-weighted sound power level	L_{WA} = 99 dB(A)
Uncertainty K	3 dB(A)
Wear ear protectors.	
The vibration total values (triaxial vector sum) determined according to EN 60745:	
Vibration emission value	a_h = 3 m/s^2
Uncertainty K	1.5 m/s^2

BATTERY AND CHARGER

Model	Compatible battery pack (not included)	Compatible charger (not included)
Lithium-Ion	RB18L13 RB18L15 RB18L15A RB18L15B RB18L20 RB18L20A RB18L25 RB18L25A RB18L40 RB18L40A RB18L50 RB18L50A RB18L60A RB18L90A	BCS618G BCL14181H BCL14183H BCL1418IV* RC18150U RC18627U RC18120 RC18115

* for vehicles with 12V DC outlets

⚠ **WARNING!** The declared vibration total values and the declared noise emission values given in this instruction manual have been measured in accordance with a standardised test and may be used to compare one tool with another. They may be used for a preliminary assessment of exposure.

The declared vibration and noise emission values represent the main applications of the tool. However, if the tool is used for different applications, used with different accessories, or poorly maintained, the vibration and noise emission may differ. These conditions may significantly increase the exposure levels over the total working period.

An estimation of the level of exposure to vibration and noise should take into account the times when the tool is turned off or when it is running idle. These conditions may significantly reduce the exposure level over the total working period.

Identify additional safety measures to protect the operator from the effects of vibration and noise, such as maintaining the tool and the accessories, keeping the hands warm (in case of vibration), and organising work patterns.



RYOBI is a trade mark of Ryobi Limited,
and is used under license.
© 2020 Techtronic Cordless GP.

Imported by:

Techtronic Industries Australia Pty Ltd
31 Gilby Road, Mount Waverley,
VIC, 3149, Australia

Techtronic Industries N.Z. Limited
Unit C, 70 Business Parade South,
Highbrook, Auckland 2013, New Zealand

961075627-01