ORIGINAL INSTRUCTIONS

Electric Silent Shredder

RSH2845T



Important!

It is essential that you read the instructions in this manual before assembling, operating and maintaining the product.

Subject to technical modification.

GENERAL SAFETY RULES

⚠ WARNING

The product is not intended for use by children or persons with reduced physical, mental or sensory capabilities. Young children should be supervised at all times by someone other than the operator to ensure that they do not play near or with the product.

⚠ WARNING

When using the product, basic safety precautions should be followed to reduce the risk of fire, electric shock and personal injury. Read all of these safety instructions carefully before operating the product. Make sure you are familiar with the controls and the proper and safe use of the product. Please keep these instructions safe for later use.

TRAINING

- Become familiar with the user guide before attempting to operate the product.
- Never allow children or people unfamiliar with these instructions to use the product. Local regulations may restrict the age of the operator.
- The operator or user of the product is responsible for accidents or hazards occurring to other people or their property.

PREPARATION

- Do not allow children to operate the product.
- Do not operate the product in the vicinity of bystanders, especially children and pets.
- Wear ear protection and safety glasses at all times while operating the product.
- Always wear protective non-slip footwear and long trousers. Avoid wearing clothing that is loose fitting or that has hanging cords or ties.
- Only operate the product in open space (e.g. not close to a wall or a fixed object) and on a firm, level surface.
- Do not operate the product on a paved or gravel surface where ejected material could cause injury.
- Before starting the product, check that all screws, nuts, bolts, and other fasteners are properly secured and that guards and collection box are in place. Return to an authorised service centre to replace damaged or unreadable labels.
- Before use, check the supply and extension cord for signs of damage or aging. If the cord becomes damaged during use, disconnect the cord from the supply immediately. Do not touch the cord before disconnecting the supply. Do not use the product if the cord is damaged or worn.

ELECTRICAL SAFETY

- Read these safety instructions thoroughly before connecting the product to the mains supply.
- Before switching on, make sure that the voltage of your electricity supply is the same as that indicated on the rating plate. The manufacturer recommends you connect to a power socket protected by an RCD with a trip of 30 mA.
- Connecting it to any other power source may cause damage.
- If the supply cord is damaged, it must be replaced by the manufacturer, its service agent or similarly qualified persons in order to avoid a hazard.
- If you need to use an extension cord, ensure it is suitable for outdoor use and has a current capacity rating sufficient to supply your product. The extension cord cable should be marked with either “H05 RN-F” or “H05VV-F”. Check it before every use for damage, always uncoil it during use because coiled cords can overheat. Damaged extension cords should not be repaired, they should be replaced with an equivalent type.
- The power plug supplied must be connected to an indoor socket. Failure to comply with this rule could result in electric shock and serious injury/death.
- A power spike causes voltage fluctuations and may affect other electrical products in the same power line. Connect the product to a power supply with an impedance equal or less than 0.389Ω to minimize voltage fluctuations. Contact your electric power supplier for further clarification.

SPECIFIC SHREDDER SAFETY RULES

OPERATION

- Before starting the product, look into the feeding chamber to make certain that it is empty.
- Keep your face and body away from the feed intake opening.
- Do not allow hands or any other part of the body or clothing inside the feeding chamber, discharge chute, or near any moving part.
- Always be sure of your footing. Keep firm footing and balance. Do not overreach. Never stand at a higher level than the base of the product when feeding material into it.
- Always stand clear of the discharge zone when operating the product.
- When feeding material into the product be extremely careful that pieces of metal, rocks, bottles, cans or other foreign objects are not included.
- If the cutting mechanism strikes any foreign objects or if the product should start making any unusual noise or vibration, switch the product off and allow the cutters to completely stop. Disconnect the product from its power supply, and take the following steps:
  - inspect for damage;
  - check for and tighten any loose parts;
  - have any damaged parts replaced or repaired with genuine Ryobi spare parts.
- Do not allow processed material to build up in the discharge chute as this may prevent proper discharge or blockage and can result in kickback of material through the feed intake opening.
- If the product becomes clogged, switch the product off and allow the cutters to completely stop. Disconnect the product from its power supply before clearing debris.
- Never operate the product if the guards, covers, collection box, or other safety devices are defective, not in place, and not in good working order.
- If dust is created by the shredding process, wear a suitable dust mask to prevent respiratory injury.
- Do not move or transport the product while the motor is running.
- Switch off the product and disconnect from the power supply whenever you leave work area.
- Do not tilt the product while the motor is running.
- You must never modify parts from the product or use parts not recommended by Ryobi, this may increase the risk of serious injury to yourself or others.
- Always ensure that ventilation openings are kept clear of debris; otherwise, the motor may overheat resulting in possible damage to the product or increase the risk of fire.
- Switch off the product before attaching or removing the collection box.

⚠ WARNING

Injuries may be caused, or aggravated, by prolonged use of a tool. When using any tool for prolonged periods, ensure you take regular breaks.

TRANSPORTATION AND STORAGE

- Make sure that the product has been thoroughly cleaned before storing it in a clean, dry place and secured out of the reach of children.
- Allow the product to adequately cool down before storing or transporting.
- When transporting the product, make sure it is secured against falling or movement within the vehicle.

MAINTENANCE

Before cleaning, inspecting or servicing the product, switch it off and allow the cutters to completely stop, disconnect the electric supply. After some time of shredding the cutting mechanism will become hot. Allow it to adequately cool down before cleaning, inspecting or adjusting.

⚠ WARNING

The cutter blades are extremely sharp. To avoid injury, exercise extreme caution and care when cleaning or working near the blades or inside the opened enclosure when the collection box is removed. Always wear heavy-duty protective gloves.

- Be aware that the cutting means can still be moved even when the power is off or if the interlock switch is engaged.
- To ensure the best performance from the product, it must be kept clean.
- Always clean the product immediately after use. Wherever possible use a stiff brush inside the feed and discharge chutes and a dry cloth on the outside of the product.
- Do not allow material to become dry and hard on any of the product surfaces, but particularly on the blades. This will directly affect the shredding performance.
- Make sure that the feed hopper and the ejection chute are kept clean and clear of all waste material
- Make sure that all nuts, bolts and screws (except the adjusting screw) are tight and secure.
- Always have any damaged or worn parts repaired, or replaced by qualified personnel at an approved Ryobi service centre.
- Never attempt to bypass the interlock switches on the collection box or the front cover of the cutter assembly.

⚠ WARNING

Do not at any time let brake fluids, gasoline, petroleum-based products, penetrating oils, etc., come in contact with plastic parts. Never use brake fluids, gasoline, petroleum-based products, or any solvents to clean tool. Most plastics are susceptible to damage from various types of commercial solvents and may be damaged by their use.

- You may perform maintenance tasks described in the manual, for other repairs or advice seek the assistance of an approved Ryobi service centre.

SHAVING PLATE ADJUSTMENT

- If the product fails to shred material, the shaving plate may need adjusting.
  NOTE: Adjusting the shaving plate should only be attempted when deemed totally necessary. Adjusting the shaving plate too often or too far could cause the product to cease working.
- Ensure the product is turned on and working in normal forward direction. Adjusting the shaving plate while the motor is turned off could lead to serious damage of the product.
- While the product is still running, turn the adjusting knob clockwise. When you hear the metal-on-metal contact or see fine aluminium shavings falling out of the discharge chute, stop adjusting the knob.

INTENDED USE

The product is designed for reducing organic garden waste materials such as branches, twigs and foliage to small pieces and is for use outdoors in a stationary position by an operator standing on the ground. The product is not intended for non-organic material, metal or material which exceeds its maximum cutting capacity of 45 mm diameter.

The product must be mounted on the stand provided and must be used with the collection box provided. It must not be mounted in any other way than shown in this manual.

RESIDUAL RISK

Even when the product is used as prescribed, it is still impossible to completely eliminate certain residual risk factors. The following hazards may arise in use and the operator should pay special attention to avoid the following:

- Exposure to noise can cause hearing injury. Wear ear protection and limit exposure.
- Inhalation of dust and particles. Wear dust mask / filter when necessary.
- Contact with the cutting mechanism. Keep unprotected body parts away from the cutting mechanism at all times.

KNOW YOUR PRODUCT

See page 7

1. Handle
2. Overload protection switch
3. On/off switch
4. Direction switch
5. Feeding chute
6. Shaving plate adjusting knob
7. Collection box
8. Wheel
9. Power cord

SHREDDING GUIDE

For best results when shredding, follow the guidelines shown in the table below.

MATERIAL	SHREDDING METHOD
Twigs and up to 6 mm diameter.	Feed into the feeding hopper at a rate which the product will accept without overloading.
Branches and up to 45 mm in diameter.	Clip off all side growth with secateurs before feeding into the feeding hopper.
Bedding plants, weeds and shrubby growth.	Knock soil and stones off the roots to avoid damage to the blades.
Freshly cut foliage, hedge, and kitchen waste.(I.e. cabbage leaves, vegetable peelings etc.)	With any material having a high moisture content it is advised to feed in some drier sticks at regular intervals to help push the material trough the cutting assembly and prevent it from clogging.
Dry sticks and twigs	By inserting these at the end of your shredding task, this will help to clean the moisture and plant sap from the inside of the product and the cutting assembly.

- Do not allow garden waste to accumulate before shredding as it will begin to compost, become too damp and clog the cutting assembly. Dry material will help most material to clear the ejection chute. Save some dry sticks until last to help clean the blade area.
- Frequently monitor the build up/collection of shredded material.
- The exit of the discharge chute must be clear at all times to prevent blockages.
- When the collection box is full, turn the product Off before emptying.

⚠ WARNING

Do not put your hands up inside the shredder's discharge chute to clear away shredded material while the product is switched on or connected to the mains supply. The blades are sharp. Wear heavy-duty gloves and exercise extreme caution when cleaning and clearing blockages.

⚠ WARNING

When feeding long woody branches/stems into the product be careful of whip and vibrations as they get caught by the cutter. The operator must wear eye protection whenever using the product.

⚠ WARNING

The cutting device has a tendency to pull branches/stems into the product. Do not try to impede entry of the material being cut once feeding has started. Always wear gloves to prevent skin lacerations when feeding material into the product.

NOTE: In normal use, do not switch off the product until all of the shredded material has cleared the cutter assembly. If the product is switched off too quickly, remaining pieces of material may clog the blade assembly and stall the motor when the product is switched back on.

SYMBOLS ON THE PRODUCT



Read and understand all instructions before operating the product, follow all warnings and safety instructions.



Beware of thrown or flying objects. Keep all bystanders, especially children and pets, at least 15 m away from the operating area



Danger - Rotating blades. Keep hands and feet out of openings while the product is running.



Switch off and remove plug from mains before maintenance or if cord is damaged.



Wear eye and ear protection.



Do not use as a step.



Wait until all machine components have completely stopped before touching them.

Wear non-slip, heavy duty gloves.

Conforms to all regulatory standards in the country in the EU where the product is purchased.

EurAsian Conformity Mark

Waste electrical products should not be disposed of with household waste. Please recycle where facilities exist. Check with your local authority or retailer for recycling advice.

The guaranteed sound power level is 102 dB

On

Off

Forward

Reverse

Press to reset

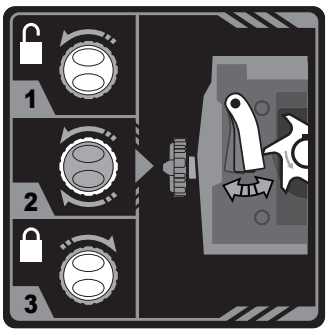

1. Turn counterclockwise to unlock.
2. Adjust the position of the shaving plate.
3. Turn clockwise to lock.

The following signal words and meanings are intended to explain the levels of risk associated with this product.

⚠ **DANGER**
Indicates an imminently hazardous situation, which, if not avoided, will result in death or serious injury.

⚠ **WARNING**
Indicates a potentially hazardous situation, which, if not avoided, could result in death or serious injury.

⚠ **CAUTION**
Indicates a potentially hazardous situation, which, if not avoided, may result in minor or moderate injury.

CAUTION
Without safety alert symbol
Indicates a situation that may result in property damage.

SYMBOLS IN THIS MANUAL

Connect to power outlet.

Disconnect from power outlet.

Parts or accessories sold separately

Note

Warning

Lock

Unlock

Keep hands away from blades

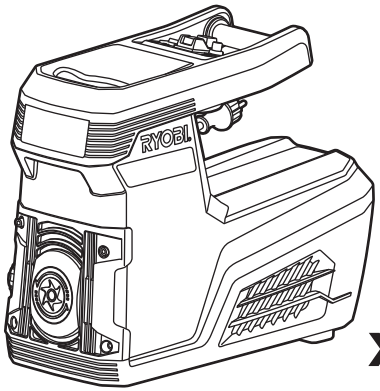

x 1

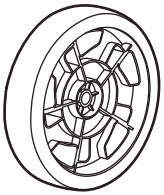

x 2

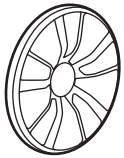

x 2



x 1



x 2

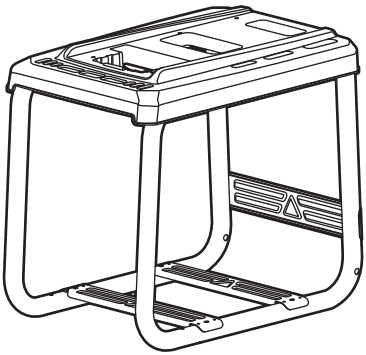

x 1

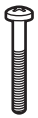

x 2



x 2



x 2



x 2

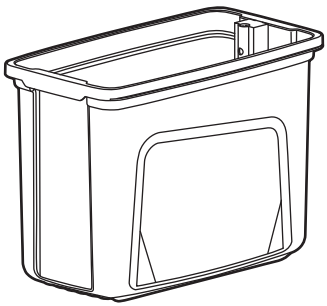

x 1



x 2



x 6









x 1

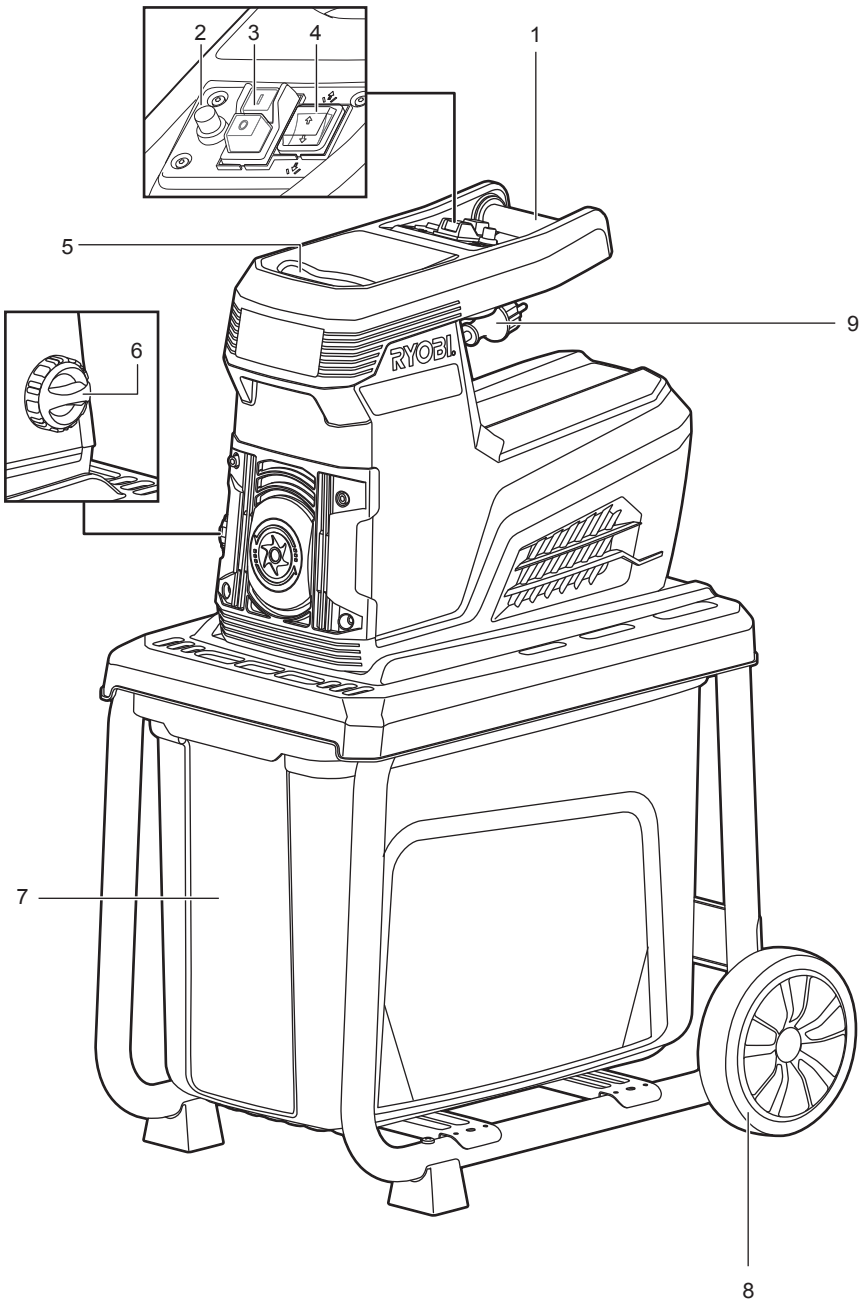
2
3
4
1
5
9
6
RYOBI
7
8

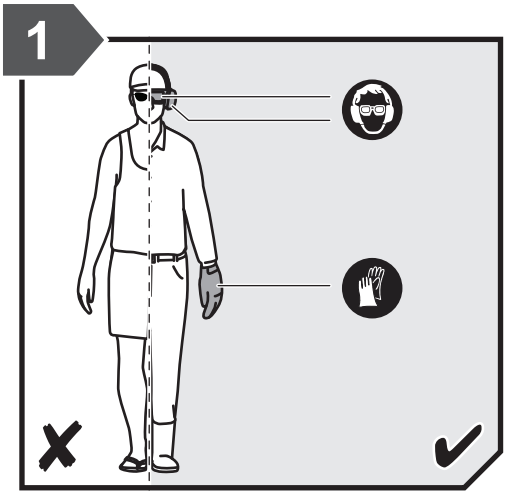
1

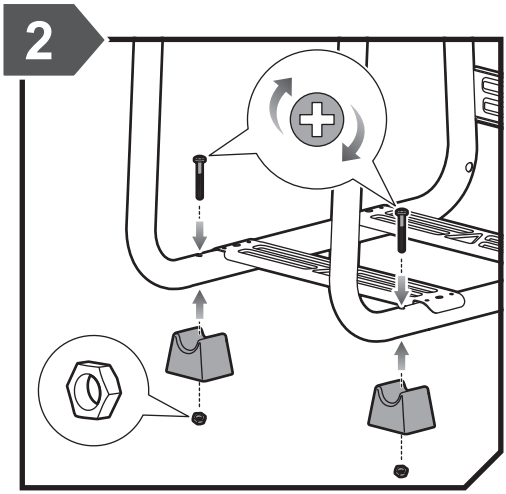
2

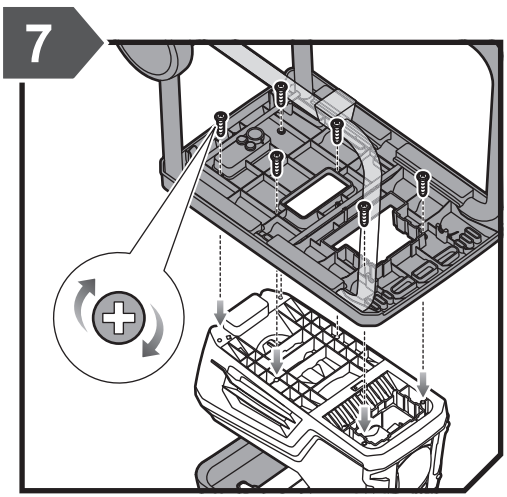
7

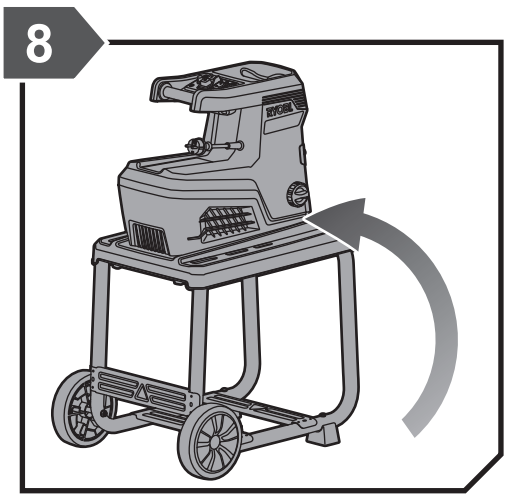
8

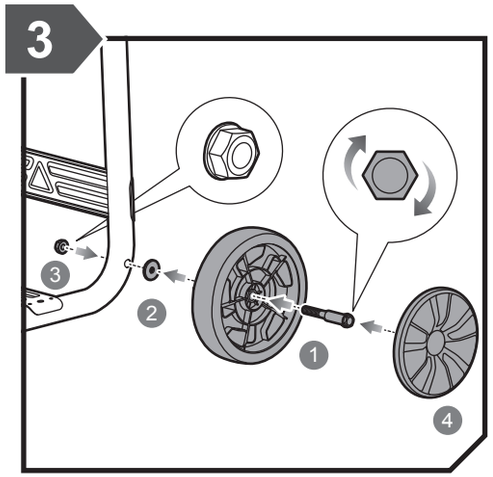
3
3
2
1
4

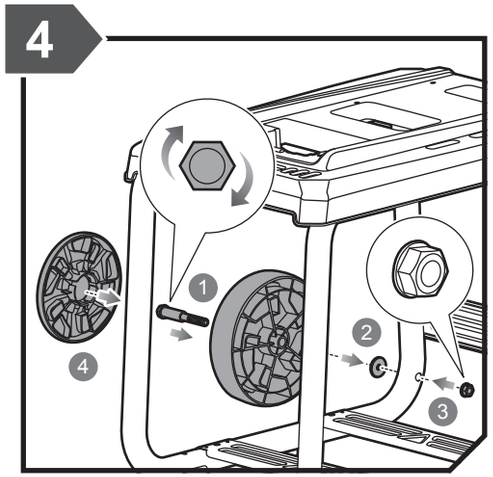
4
1
2
3
4

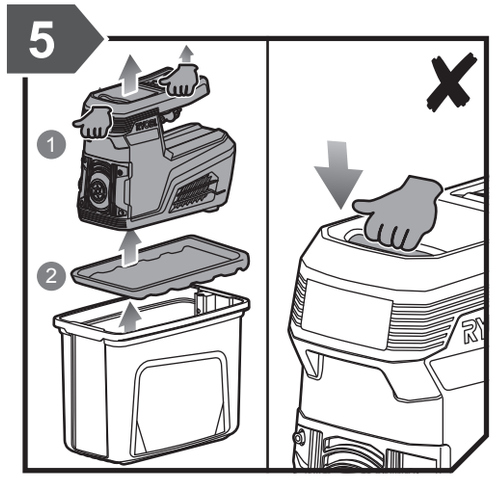
5
1
2

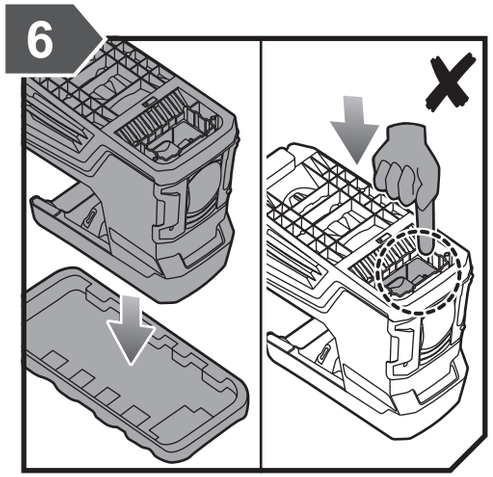
6

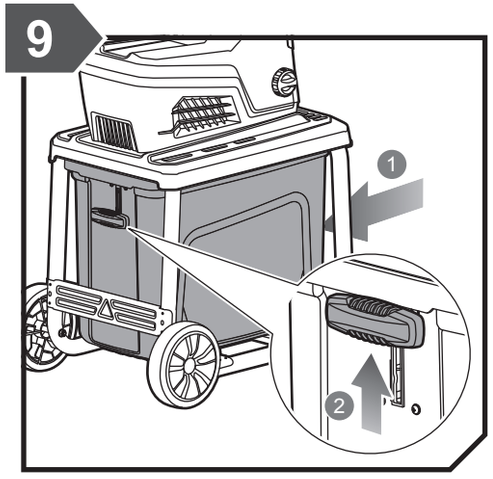
9
1
2

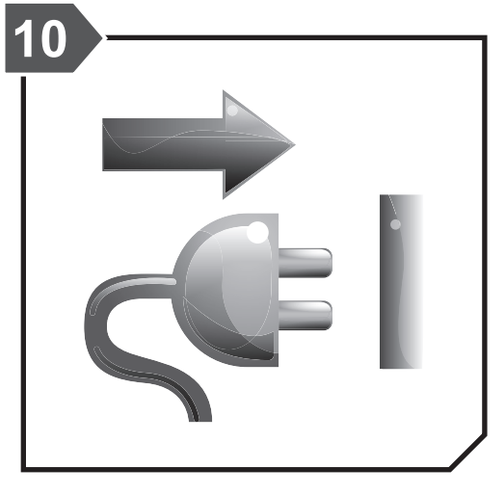
10

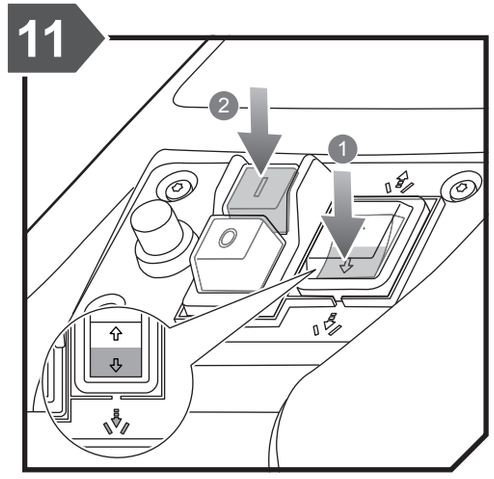
11
2
1

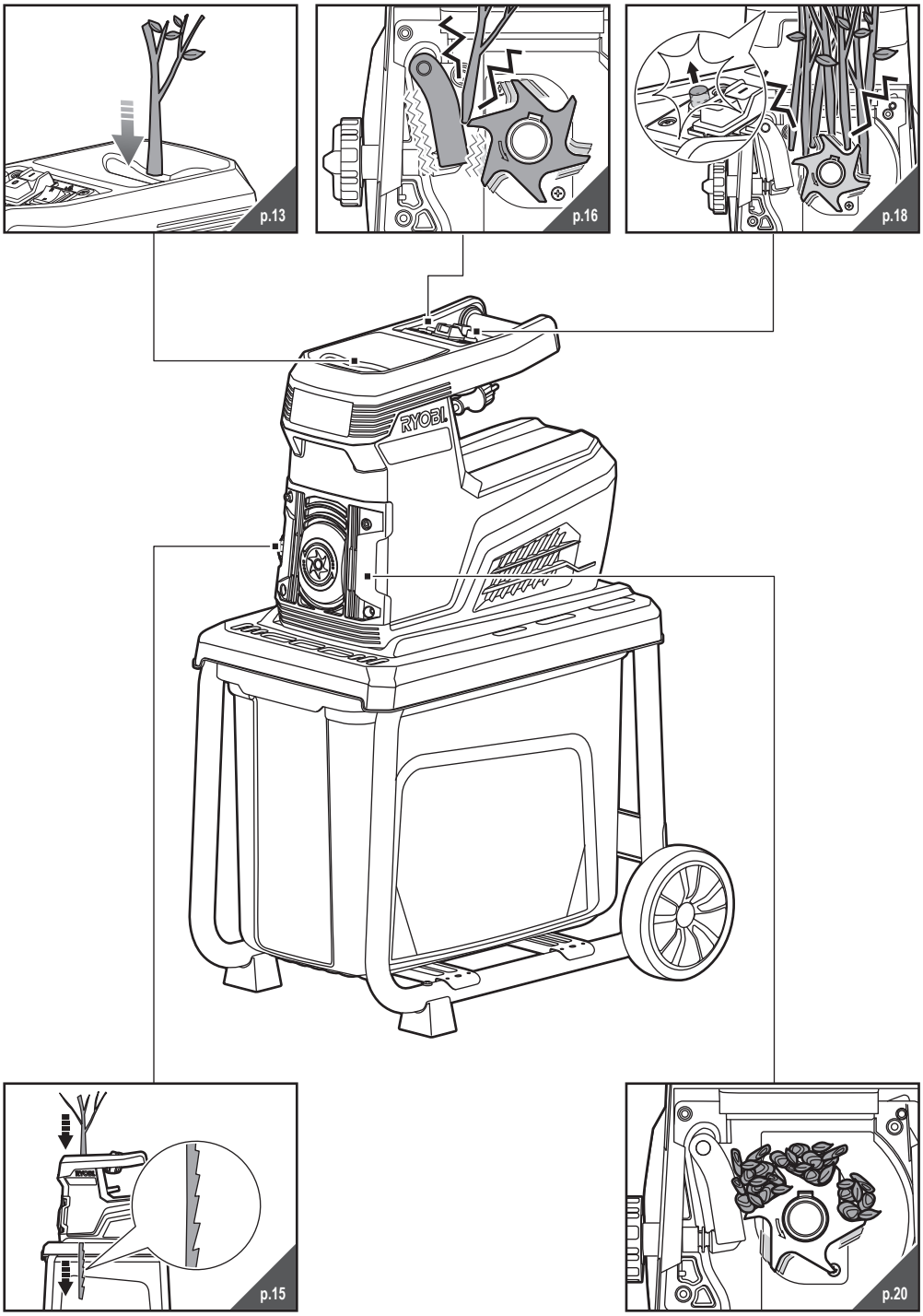
p.13
p.16
p.18
RYOBI
p.15
p.20

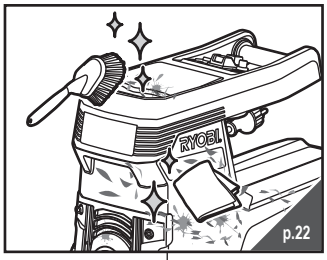
RYOBI
p.22

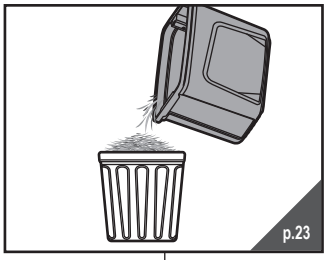
p.23

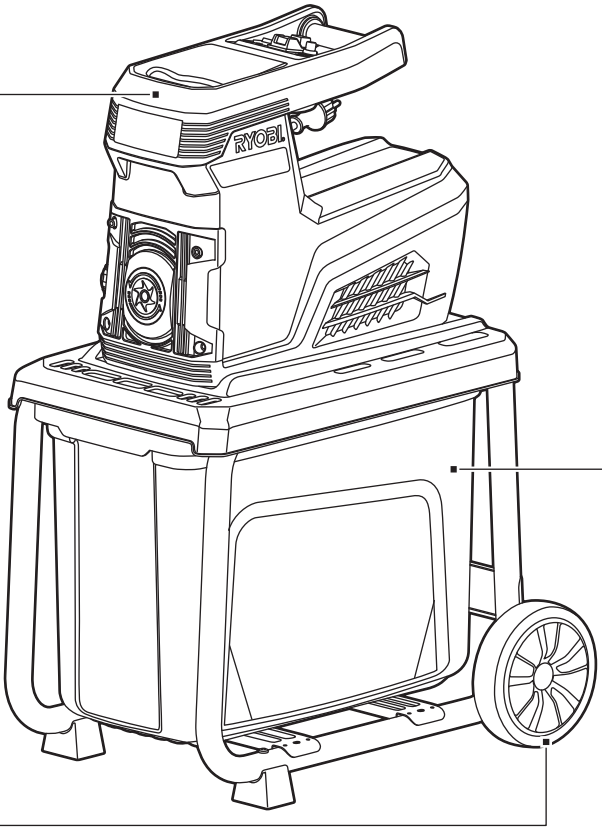
RYOBI

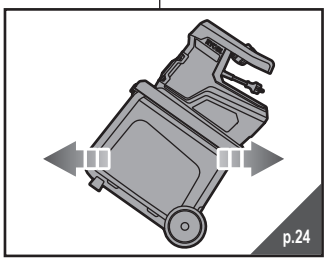
p.24

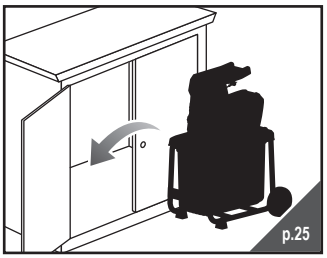
p.25

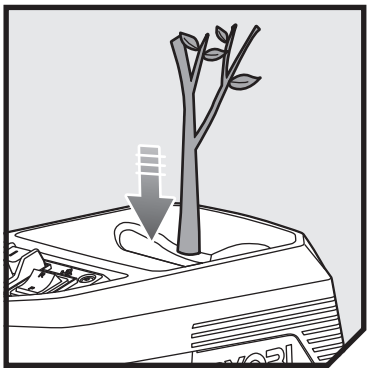

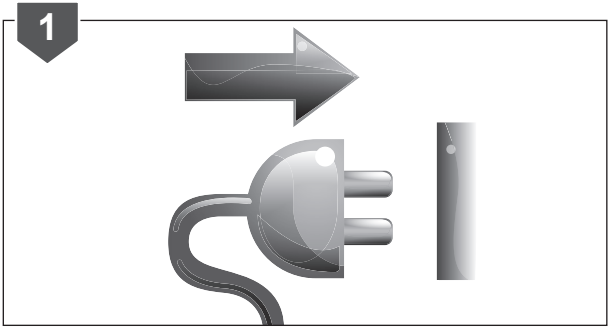
1

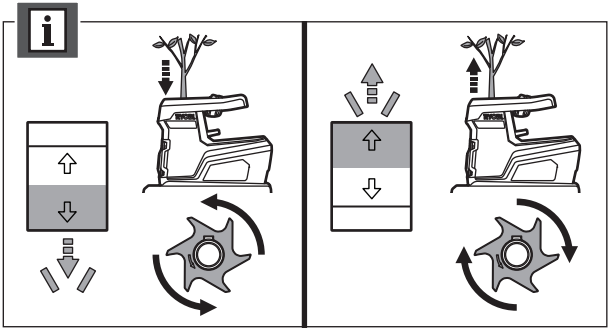
i

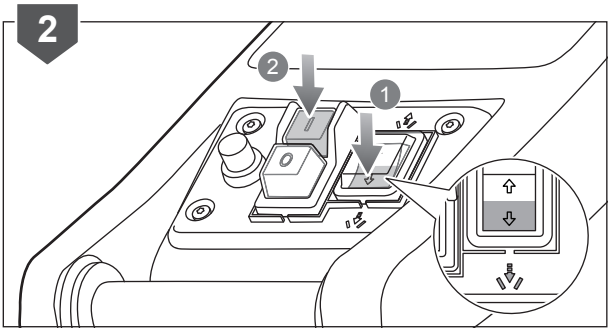
2
2
1

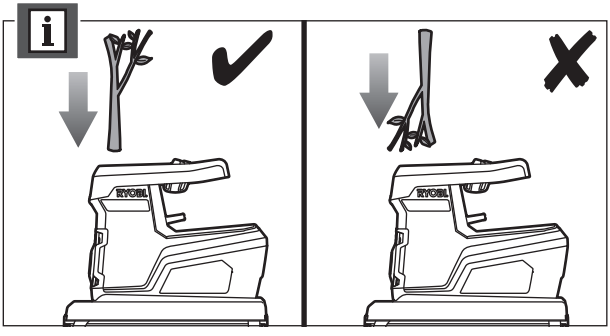
i

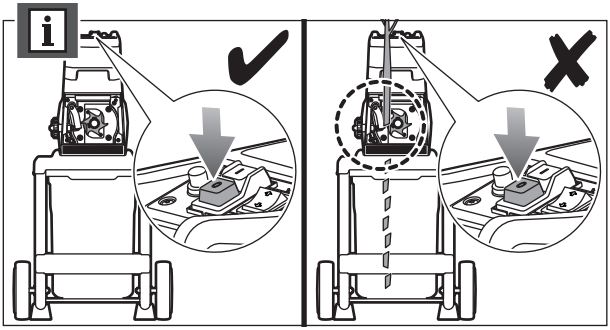

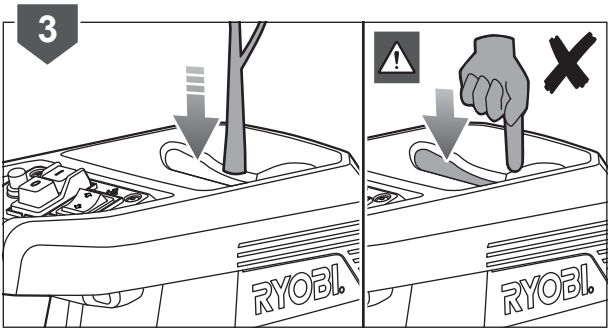
3
RYOBI
RYOBI

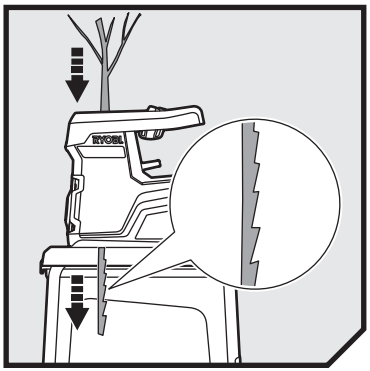

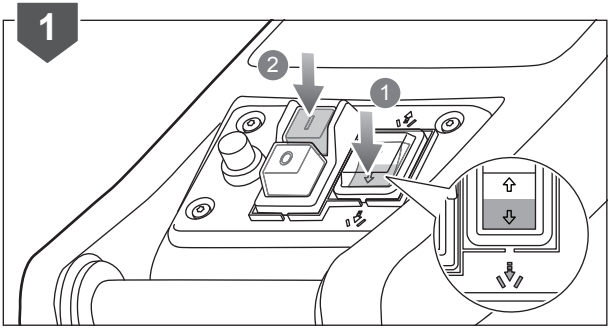
1
2
1

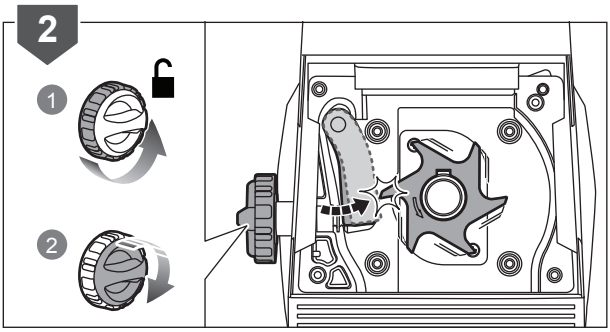
2
1
2

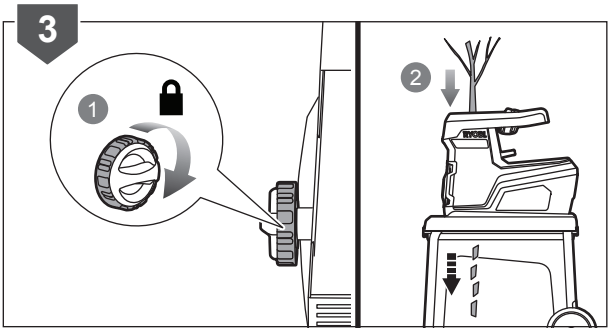
3
1
2

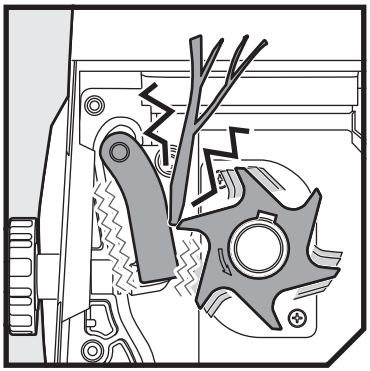

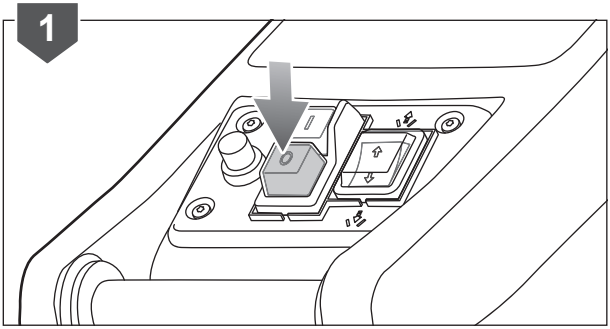
1

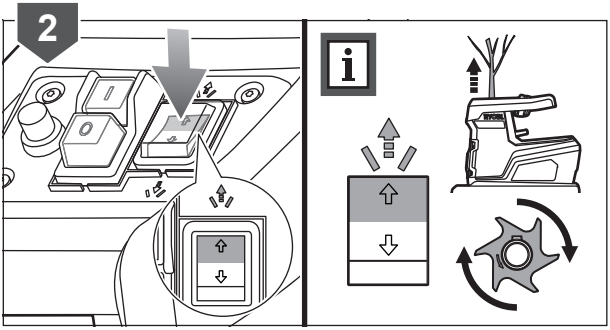
2

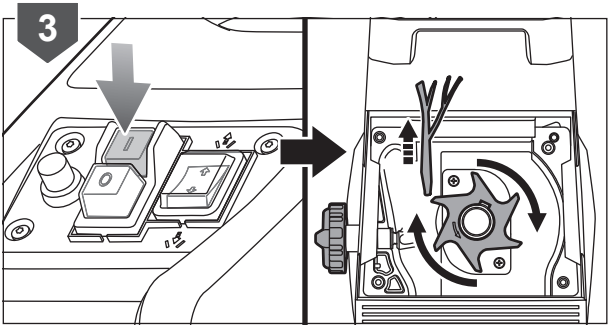
3

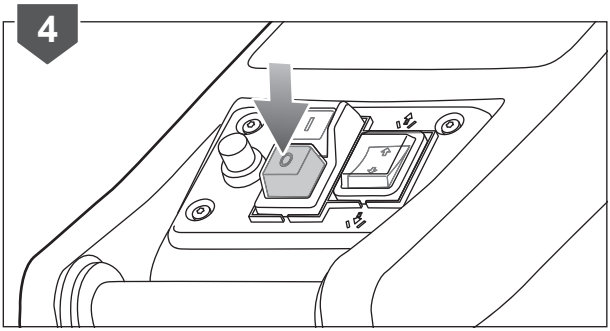
4

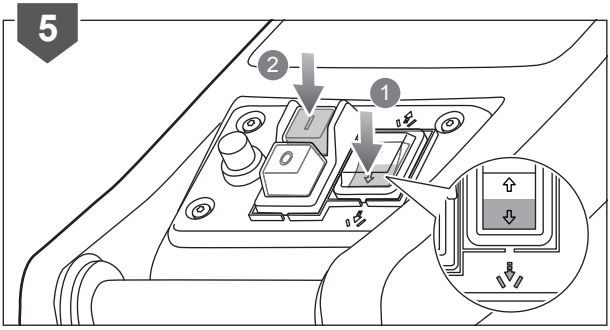
5
2
1

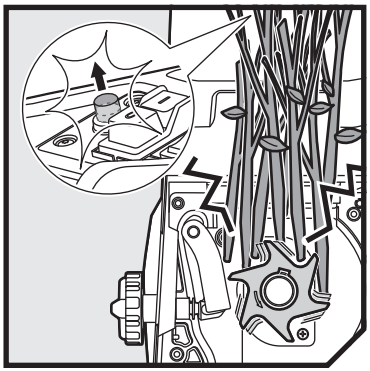

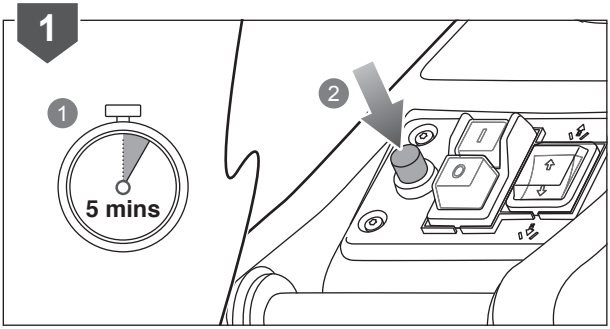
1
1
5 mins
2
2

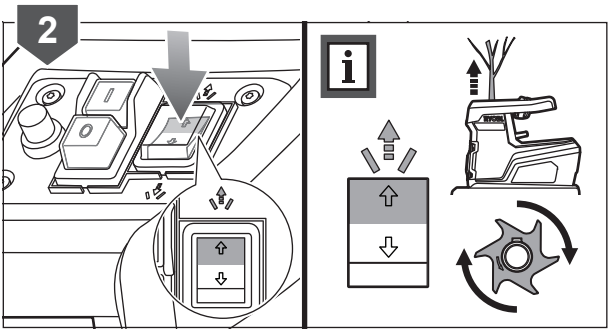
2
i

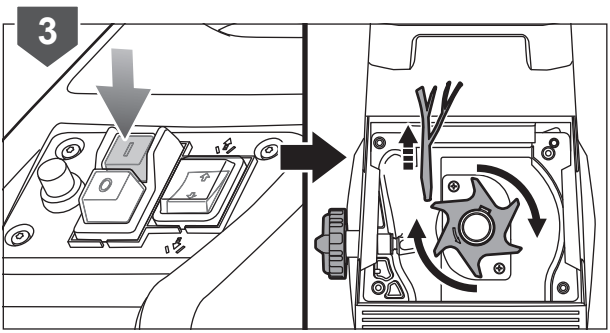
3

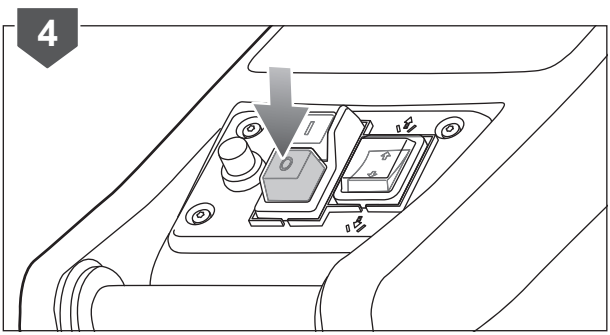
4

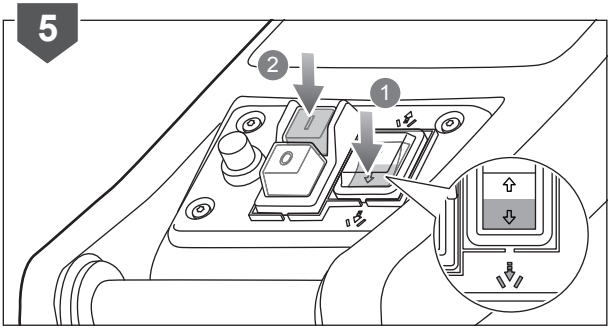
5
2
1

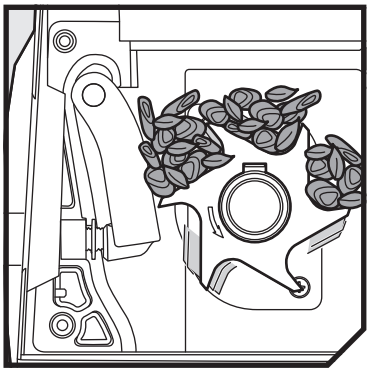

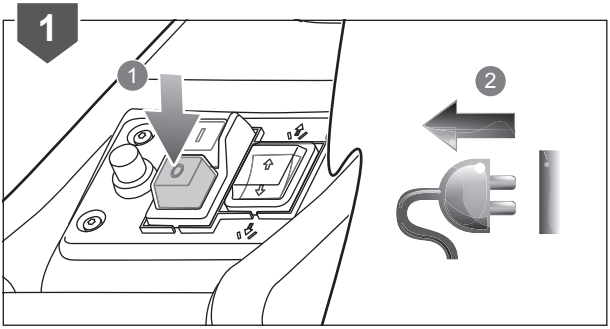
1
1
2

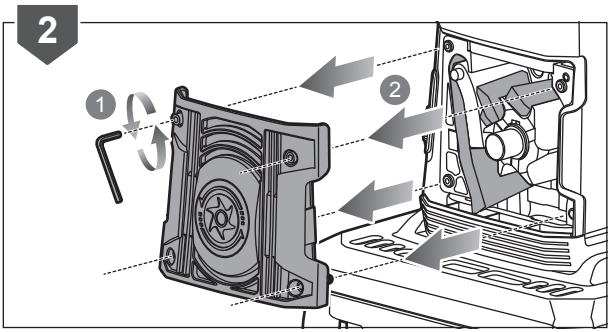
2
1
2

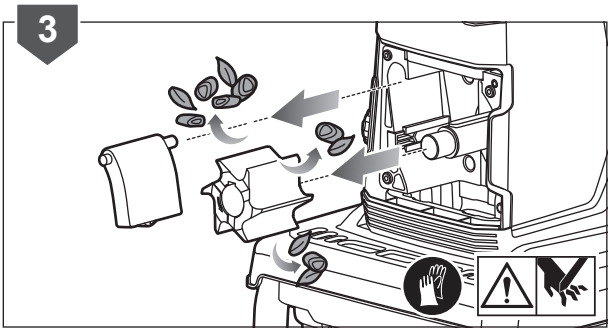
3

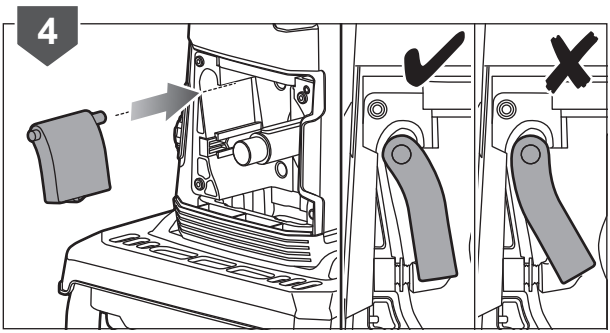
4

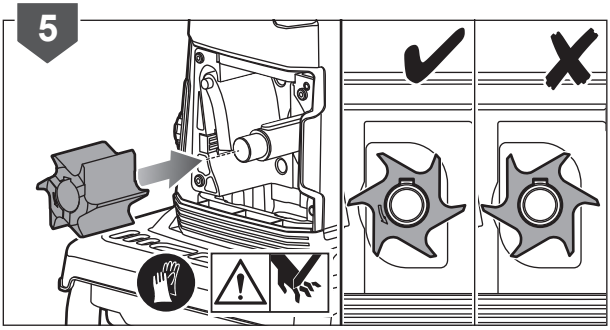
5

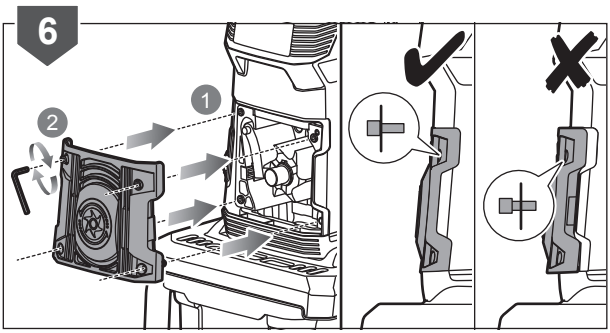
6
1
2

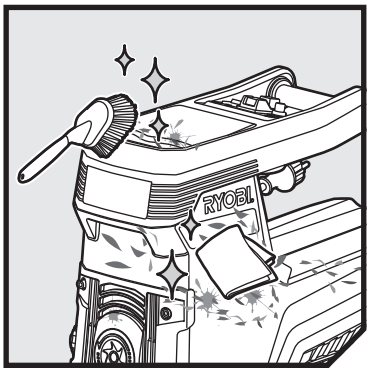

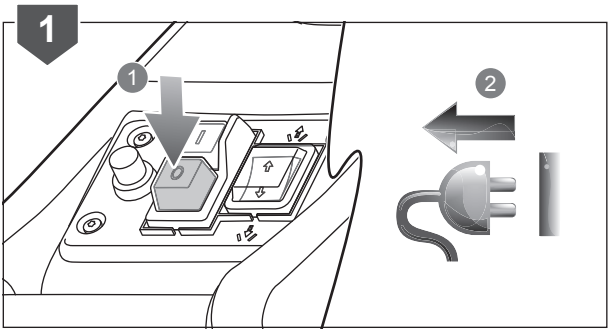
1
1
2

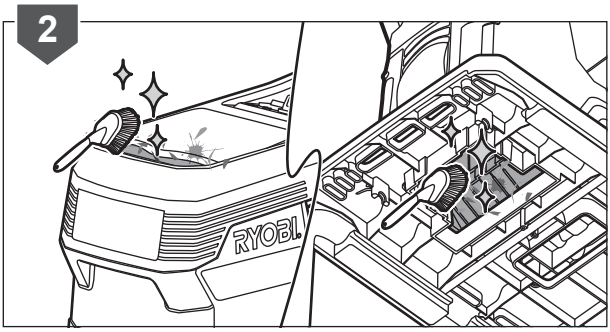
2

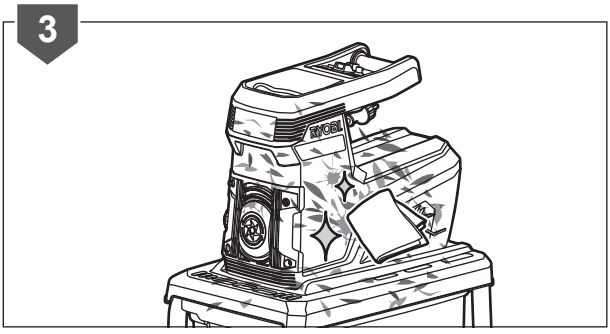
3

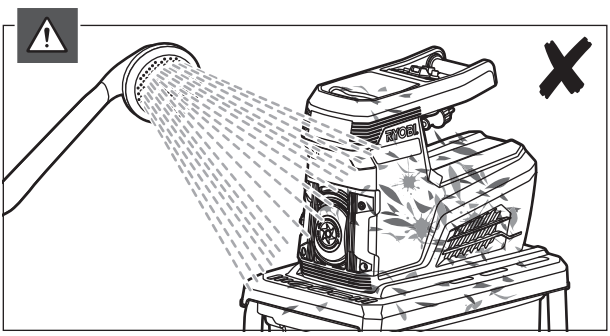

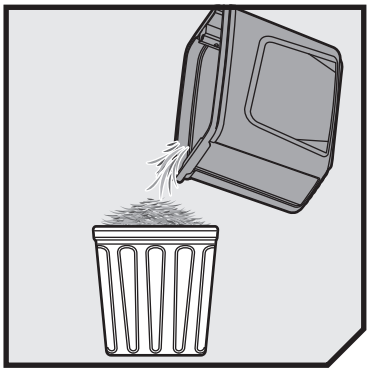

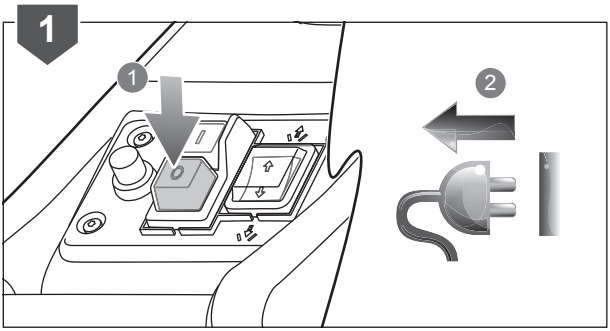
1
1
2

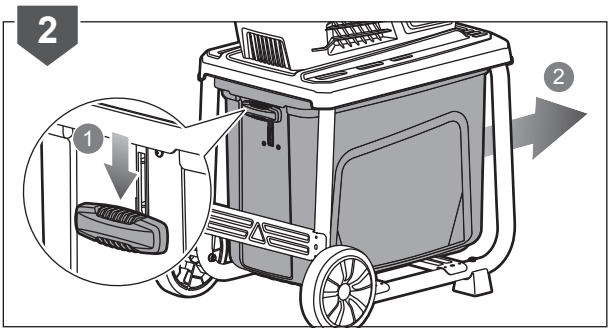
2
1
2

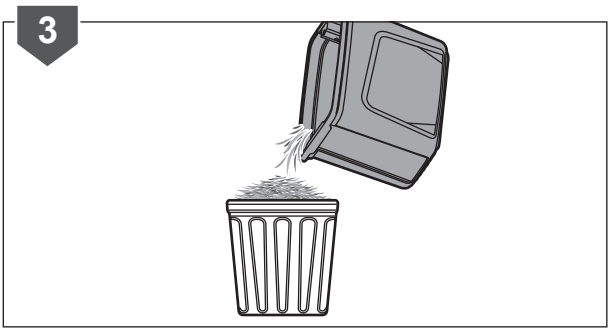
3

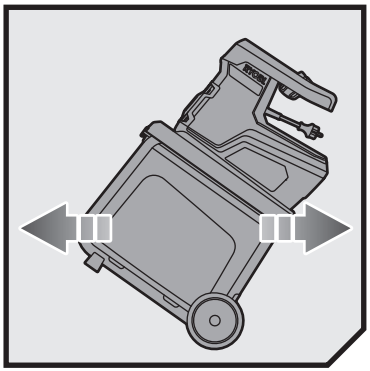

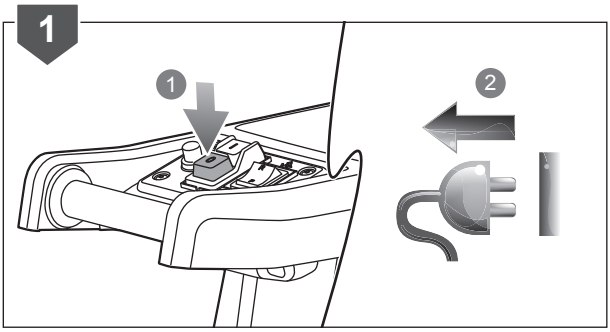
1
1
2

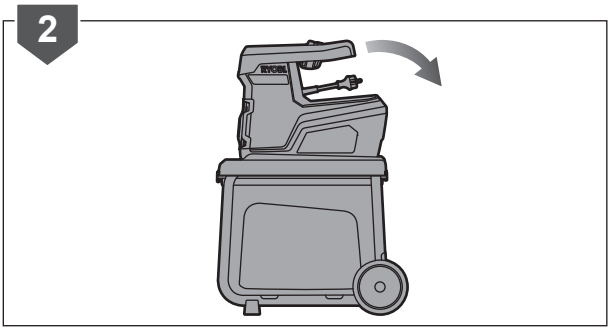
2

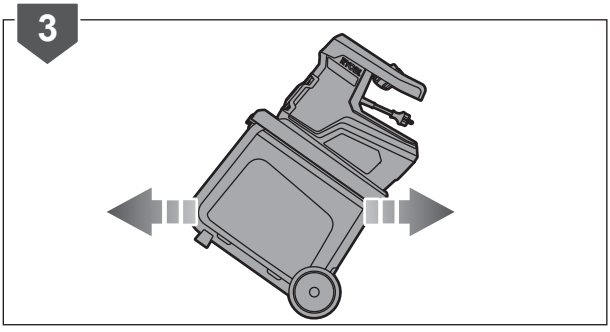
3



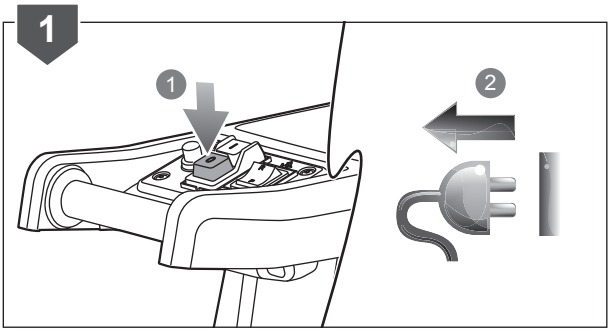
1
1
2

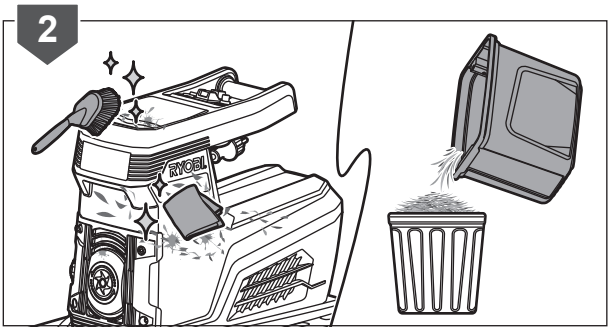
2
RYOBI

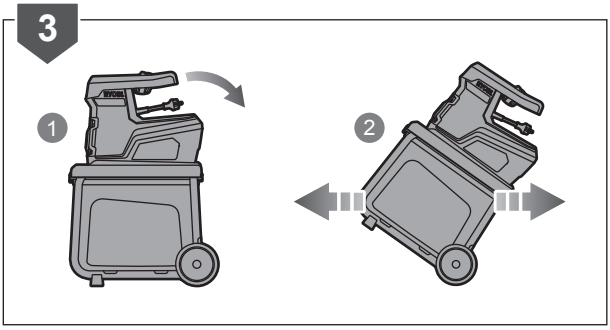
3
1
2

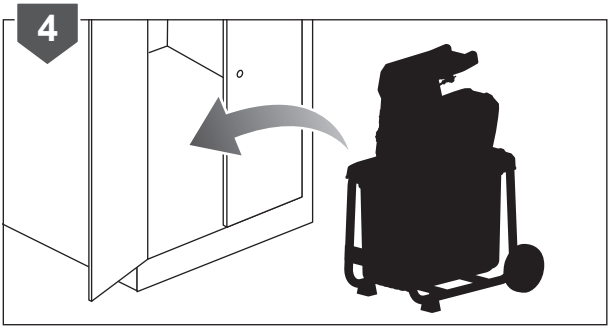
4

TROUBLESHOOTING

PROBLEM	CAUSE	ACTION
Motor does not run.	The overload protection has operated	Wait for the motor to cool, press the reset button. Switch on the product again.
	Power failure	Check the power supply cable, the plug and the house fuse.
Material to be shredded is not drawn in	The material is jammed in the feeding funnel.	Follow instruction in the manual for clearing obstructions.
	Shaving plate is too far from the cutting means.	Follow instruction in the manual for shaving plate adjustment.

PRODUCT SPECIFICATIONS

Rated power	2800W(S6, 40%), 2300W(S1)
Rated voltage	230-240V ~50Hz
Maximum cutting diameter	45 mm
Idle speed	40 min^{-1}
Weight	28.8 kg
Noise emission level (in accordance with EN 50434:2014 Annex FF)	
A-weighted sound pressure level at operator's position	80.7 dB(A)
Uncertainty of measurement	2.5 dB
A-weighted sound power level	99.30 dB(A)
Uncertainty of measurement	2.26 dB

NOTE:

1. The S6(40%) indicates a load profile of 4 minutes load and 6 minutes idle time. For practical application, (i.e. collecting waste and shredding) continuous operation is permitted.
2. The maximum cutting diameter depends on the hardness of the wood.

GUARANTEE

In addition to any statutory rights resulting from the purchase, this product is covered by a guarantee as stated below.

1. The guarantee period is 24 months for consumers and commences on the date when the product was purchased. This date has to be documented by an invoice or other proof of purchase. The product is designed and dedicated to consumer and private use only. So there is no guarantee provided in case of professional or commercial use.
2. There is, in some cases (i.e. promotion, range of tools), a possibility to extend the warranty period over the period described above using the registration on the www.ryobitools.eu website. The eligibility of the tool is clearly displayed in stores and/or on packaging. The end user needs to register his/her newly-acquired tools online within 8 days from the date of purchase. The end user may register for the extended warranty in his country of residence if listed on the online registration form where this option is valid. Furthermore, end users must give their consent to the storage of the data which are required to enter online and they have to accept the terms and conditions. The registration confirmation receipt, which is sent out by e-mail, and the original invoice showing the date of purchase will serve as proof of the extended warranty. Your statutory rights remain unaffected.
3. The guarantee covers all defects of the product during the warranty period due to defaults in workmanship or material at the purchase date. The guarantee is limited to repair and/or replacement and does not include any other obligations including but not limited to incidental or consequential damages. The warranty is not valid if the product has been misused, used contrary to the instruction manual, or being incorrectly connected. This guarantee does not apply to:
   - any damage to the product that is the result of improper maintenance
   - any product that has been altered or modified
   - any product where original identification (trade mark, serial number) markings have been defaced, altered or removed
   - any damage caused by non-observance of the instruction manual
   - any non CE product
   - any product which has been attempted to be repaired by an non-qualified professional or without prior authorization by Techtronic Industries
   - any product connected to improper power supply (amps, voltage, frequency)
   - any product used with inappropriate fuel mixture (fuel, oil, percentage of oil)
   - any damage caused by external influences (chemical, physical, shocks) or foreign substances
   - normal wear and tear of spare parts
   - inappropriate use, overloading of the tool
   - use of non-approved accessories or parts
   - carburettor after 6 months, carburettor adjustments after 6 months
   - components (parts and accessories) subject to natural wear and tear, including but not limited to bump knobs, drive belts, clutch, blades of hedge trimmers or lawn mowers, harness, cable throttle, carbon brushes, power cord, tines, felt washers, hitch pins, blower fans, blower and vacuum tubes, vacuum bag and straps, guide bars, saw chains, hoses, connector fittings, spray nozzles, wheels, spray wands, inner reels, outer spools, cutting lines, spark plugs, air filters, gas filters, mulching blades, etc.
4. For servicing, the product must be sent or presented to a RYOBI authorized service station listed for each country in the following list of service station addresses. In some countries your local RYOBI dealer undertakes to send the product to the RYOBI service organisation. When sending a product to a RYOBI service station, the product should be safely packed without any dangerous contents such as petrol, marked with sender's address and accompanied by a short description of the fault.
5. A repair/replacement under this guarantee is free of charge. It does not constitute an extension or a new start of the guarantee period. Exchanged parts or tools become our property. In some countries delivery charges or postage will have to be paid by the sender.
6. This guarantee is valid in the European Community, Switzerland, Iceland, Norway, Liechtenstein, Turkey and Russia. Outside these areas, please contact your authorized RYOBI dealer to determine if another warranty applies.

AUTHORISED SERVICE CENTRES

ACD PLANT LTD
145 Southbank Road
Coundon
Coventry, West Midlands
CV6 1FG
Phone: 02476 594348
Email: danmcgunigle@acdplant.co.uk
Web: www.acdplant.co.uk

CBS Power Tools Limited
Unit 4, V P Square
Storeys Bar Rd, Fengate
Peterborough, Cambridgeshire
PE1 5YS
Phone: 01733 343031
Email: steve@cbspowertools.co.uk
Web: www.cbspowertools.com

C D Powertools
76 Old Road
Churwell Morley, Leeds
LS27 7TH
Phone: 0113 2718494
Email: info@cdpowertools.co.uk
Web : www.cdpowertools.co.uk

C J Sinclair Limited
44 Victoria Road
St Peters
Broadstairs, Kent
CT10 2UG
Phone: 01843 869400
Email: repairs@cjsinclairltd.co.uk
Web: www.cjsinclairltd.co.uk

Powertech Ind Ltd
Unit 2C, Ellison Road
Norwood Ind, Killamarsh
Sheffield, South Yorkshire
S21 2JG
Phone: 01142 474080
Email: stores@powertech-industrial.co.uk
Web: www.powertech-industrial.co.uk

RYCKO Technical Services LTD
104 Green Lane
St Albans, Herts
AL3 6EX
Phone: 08458 678790
Email: info@ryckotechnical.com
Web: www.ryckotechnical.com

ToolTech Industrial Equipment
227 E Dunhill Road, Macosquin
Coleraine, Co Londonderry
BT514LQ
Phone: 028 70359493
Email: john@tooltech.org.uk

For an updated list of authorised service centres, visit http://uk.ryobitools.eu/header/service-and-support/service-agents.

DECLARATION OF CONFORMITY

Techtronic Industries GmbH
Max-Eyth-Straße 10, 71364 Winnenden, Germany

Herewith we declare that the product

Electric Silent Shredder
Brand: Ryobi
Model number: RSH2845T
Serial number range: 44436801000001 - 44436801999999

is in conformity with the following European Directives and harmonised standards

2006/42/EC, 2004/108/EC, 2000/14/EC, 2005/88/EC, 2011/65/EU, EN 55014-1:2006+A1:2009+A2:2011, EN 55014-2:1997+A1:2001+A2:2008, EN 61000-3-2:2006+A1:2009+A2:2009, EN 61000-3-11:2000, EN 60335-1:2012+A11:2014, EN 50434:2014, EN 50581:2012

Measured sound power level 99.3 dB(A)
Guaranteed sound power level 102 dB(A)
Conformity assessment method to Annex V Directive 2000/14/EC amended by 2005/88/EC

CE

Andrew John Eyre (BEng, CEng, MIET)
Vice President, Regulatory & Safety
Winnenden, Jan. 16, 2014

Authorised to compile the technical file:
Alexander Krug, Managing Director
Techtronic Industries GmbH
Max-Eyth-Straße 10, 71364 Winnenden, Germany


RYOBI